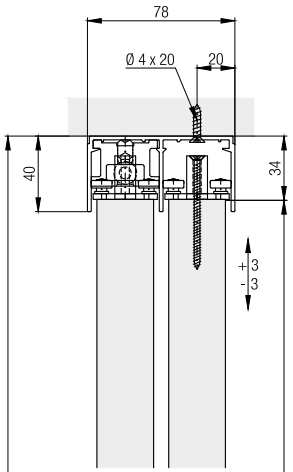
78
Ø 4 x 20
20
40
34
+3
-3
H
TH = H - 47

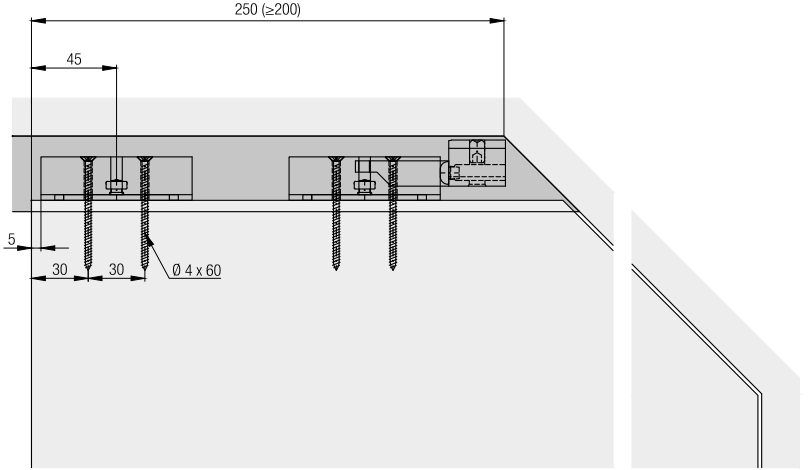
250 (≥200)
45
5
30
30
Ø 4 x 60

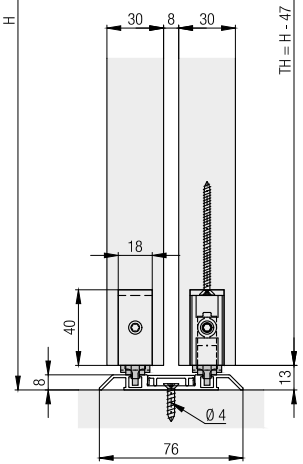
30
8
30
18
40
8
13
Ø 4
76

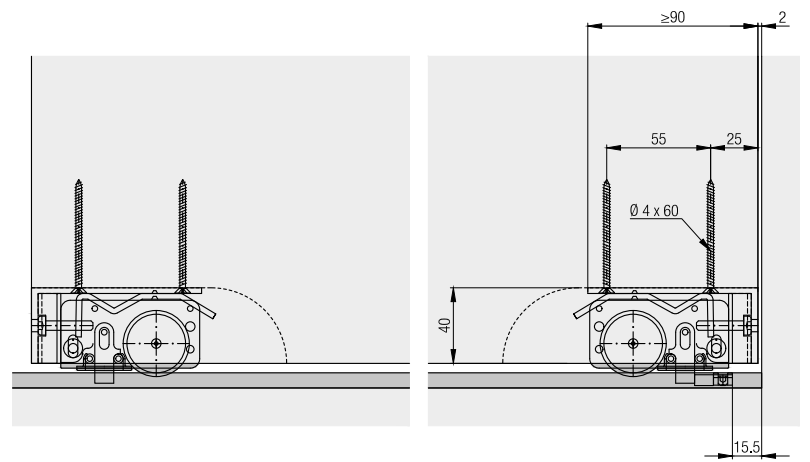
≥90
2
55
25
Ø 4 x 60
40
15.5