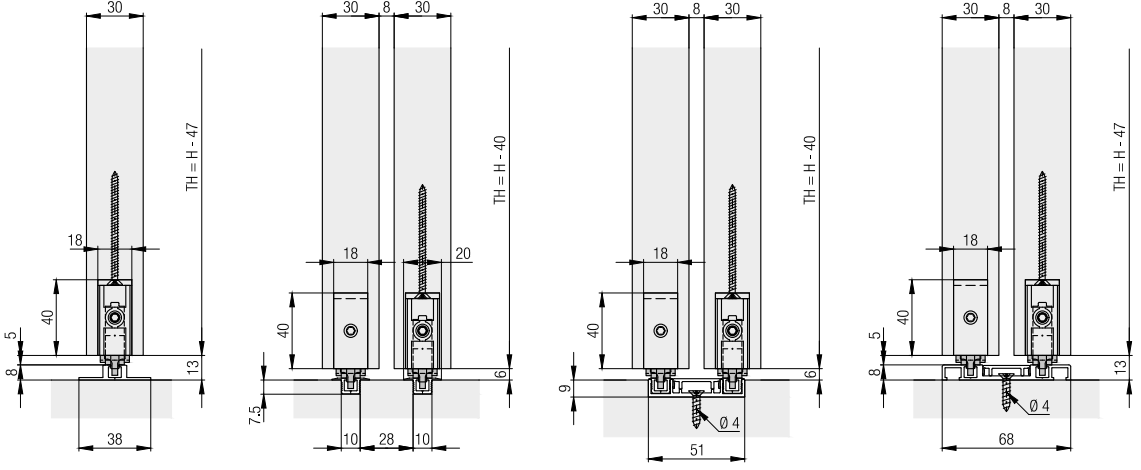
30
TH = H - 47
18
40
5
8
13
38
30
8
30
TH = H - 40
18
20
40
6
7.5
10
28
10
30
8
30
TH = H - 40
18
40
6
9
Ø 4
51
30
8
30
TH = H - 47
18
40
5
8
13
Ø 4
68