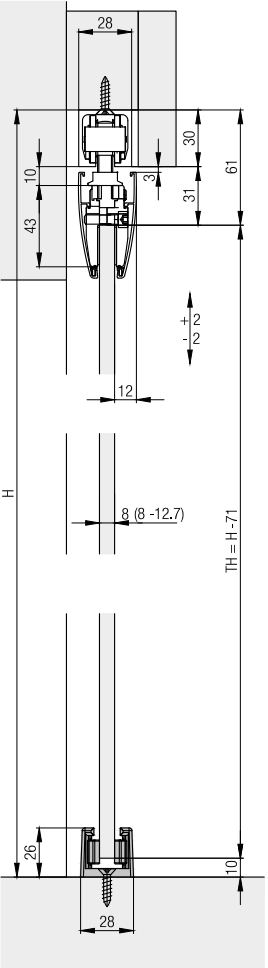
28
30
61
10
3
31
43
+2
-2
12
H
8 (8 -12.7)
TH = H -71
26
10
28

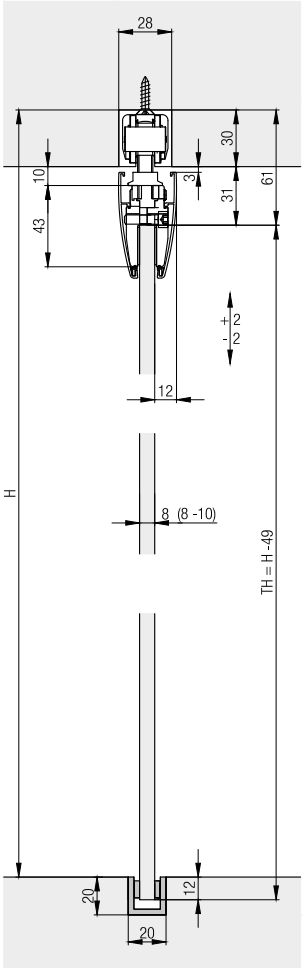
28
30
61
10
3
31
43
+2
-2
12
H
8 (8 -10)
TH = H -49
20
12
20

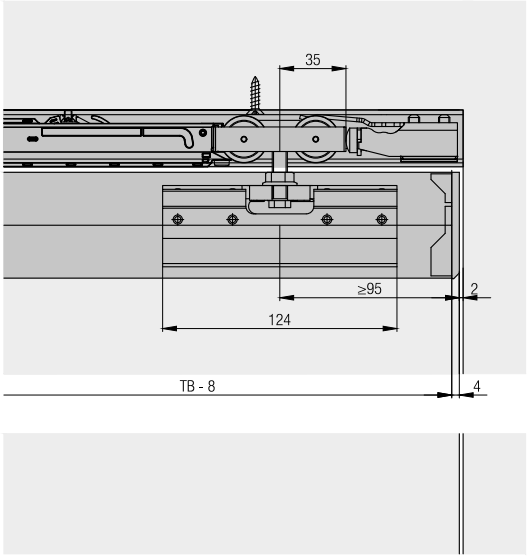
35
≥95
2
124
TB - 8
4

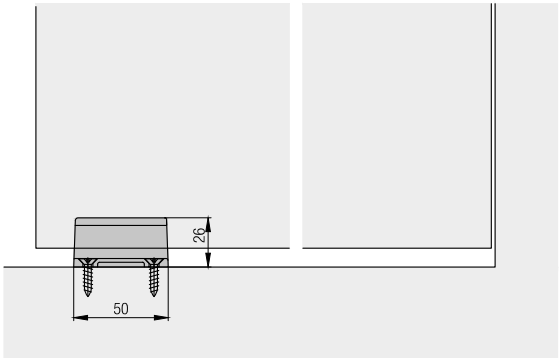
26
50