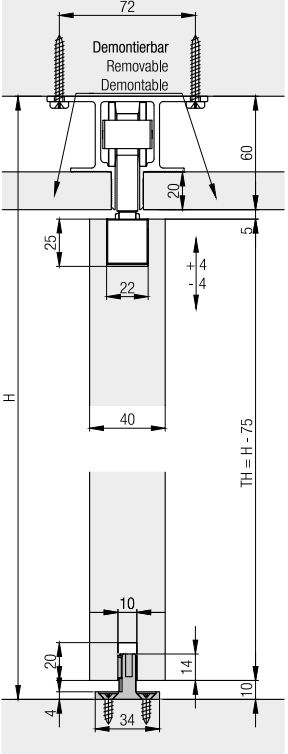
72
Demontierbar
Removable
Demontable
60
20
5
25
22
+ 4
- 4
H
40
TH = H - 75
10
20
14
10
4
34

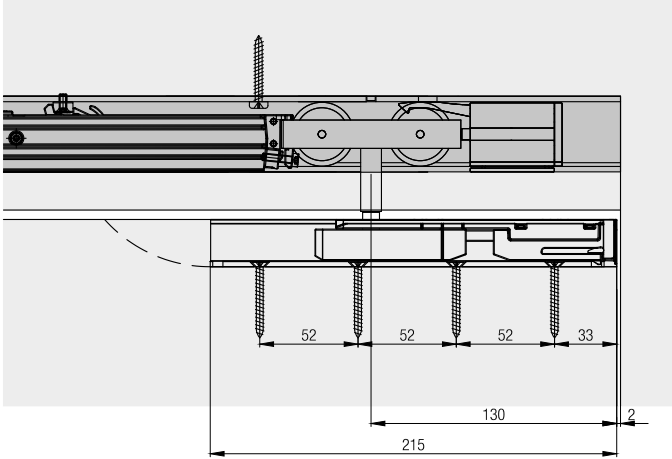
52
52
52
33
130
2
215

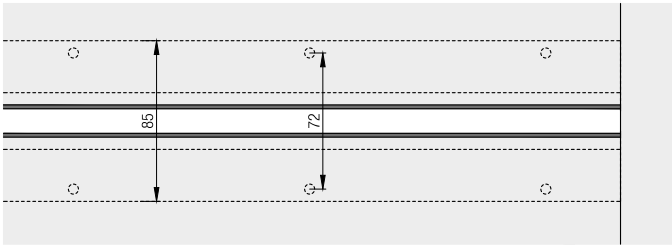
85
72