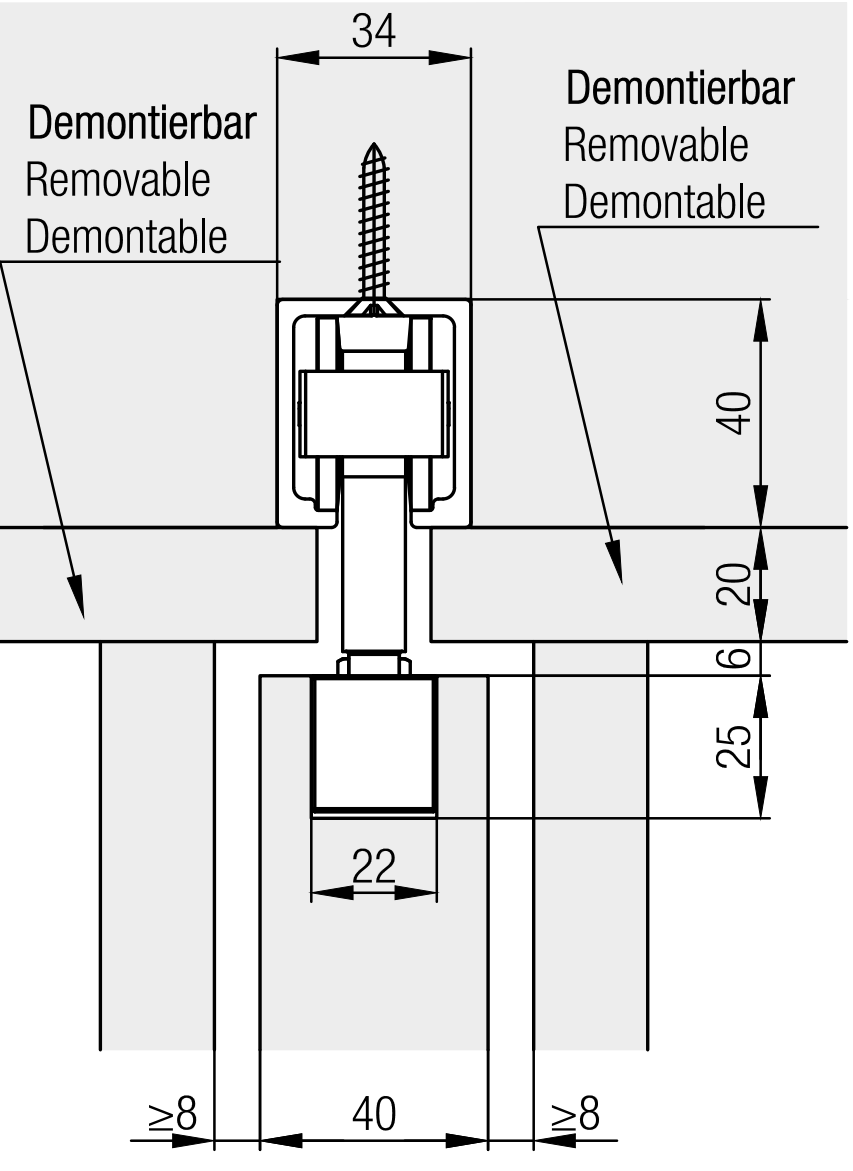
34
Demontierbar
Removable
Demontable
Demontierbar
Removable
Demontable
40
20
6
25
22
≥8
40
≥8

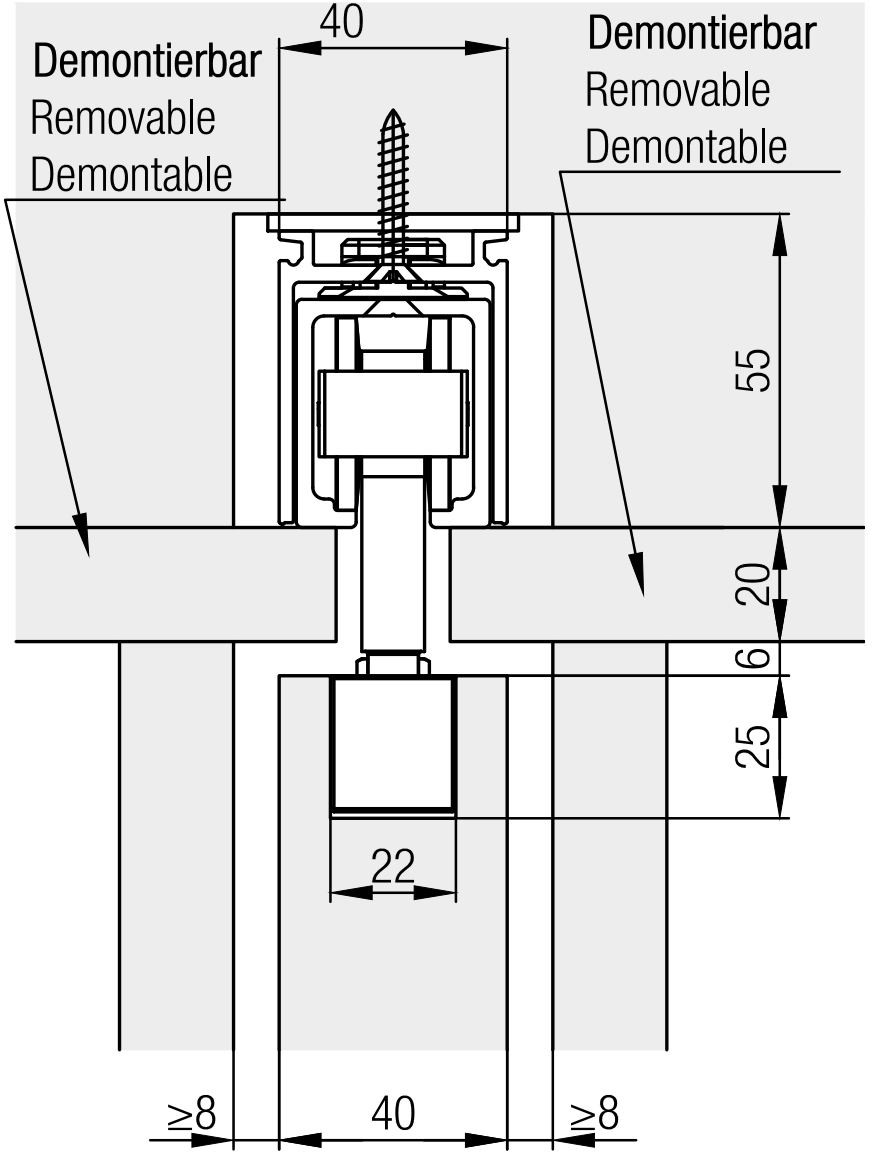
40
Demontierbar
Removable
Demontable
Demontierbar
Removable
Demontable
55
20
6
25
22
≥8
40
≥8