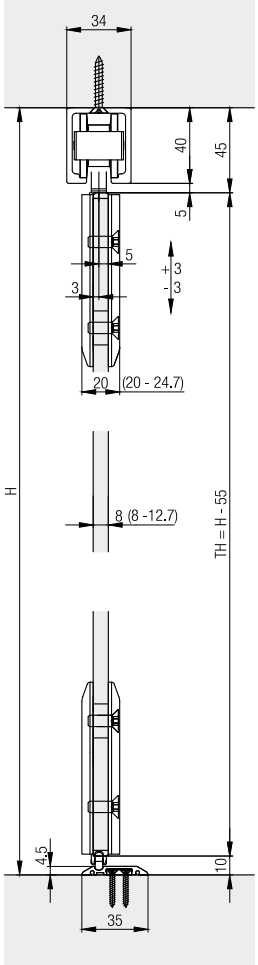
34
40
45
5
5
3
+3
-3
20
(20 - 24.7)
H
8 (8 -12.7)
TH = H - 55
4.5
10
35

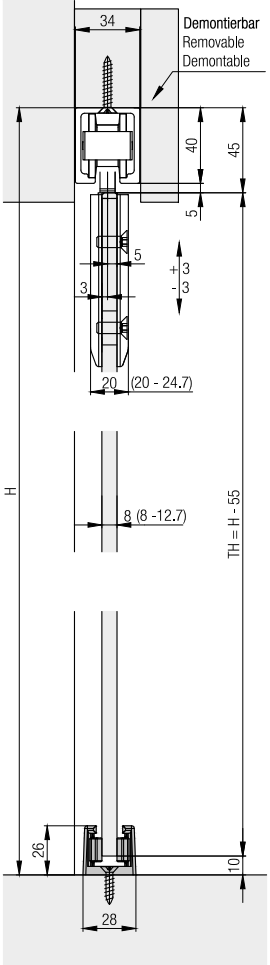
34
Demontierbar
Removable
Demontable
40
45
5
5
3
+3
-3
20
(20 - 24.7)
H
8 (8 -12.7)
TH = H - 55
26
10
28

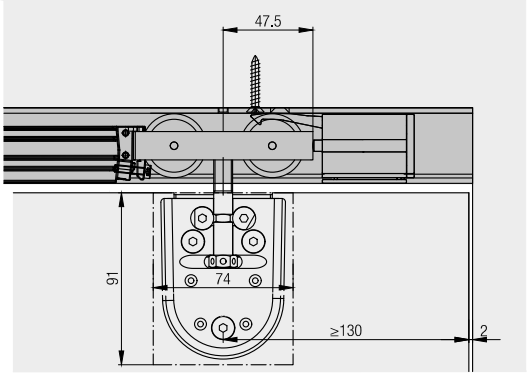
47.5
91
74
≥130
2

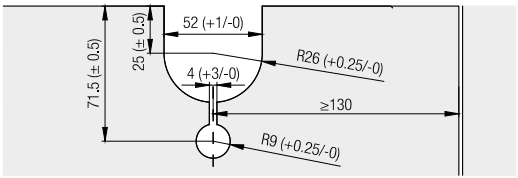
52 (+1/-0)
25 (± 0.5)
71.5 (± 0.5)
R26 (+0.25/-0)
4 (+3/-0)
≥130
R9 (+0.25/-0)

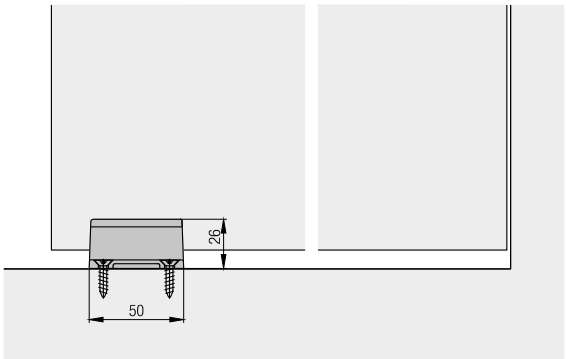
26
50