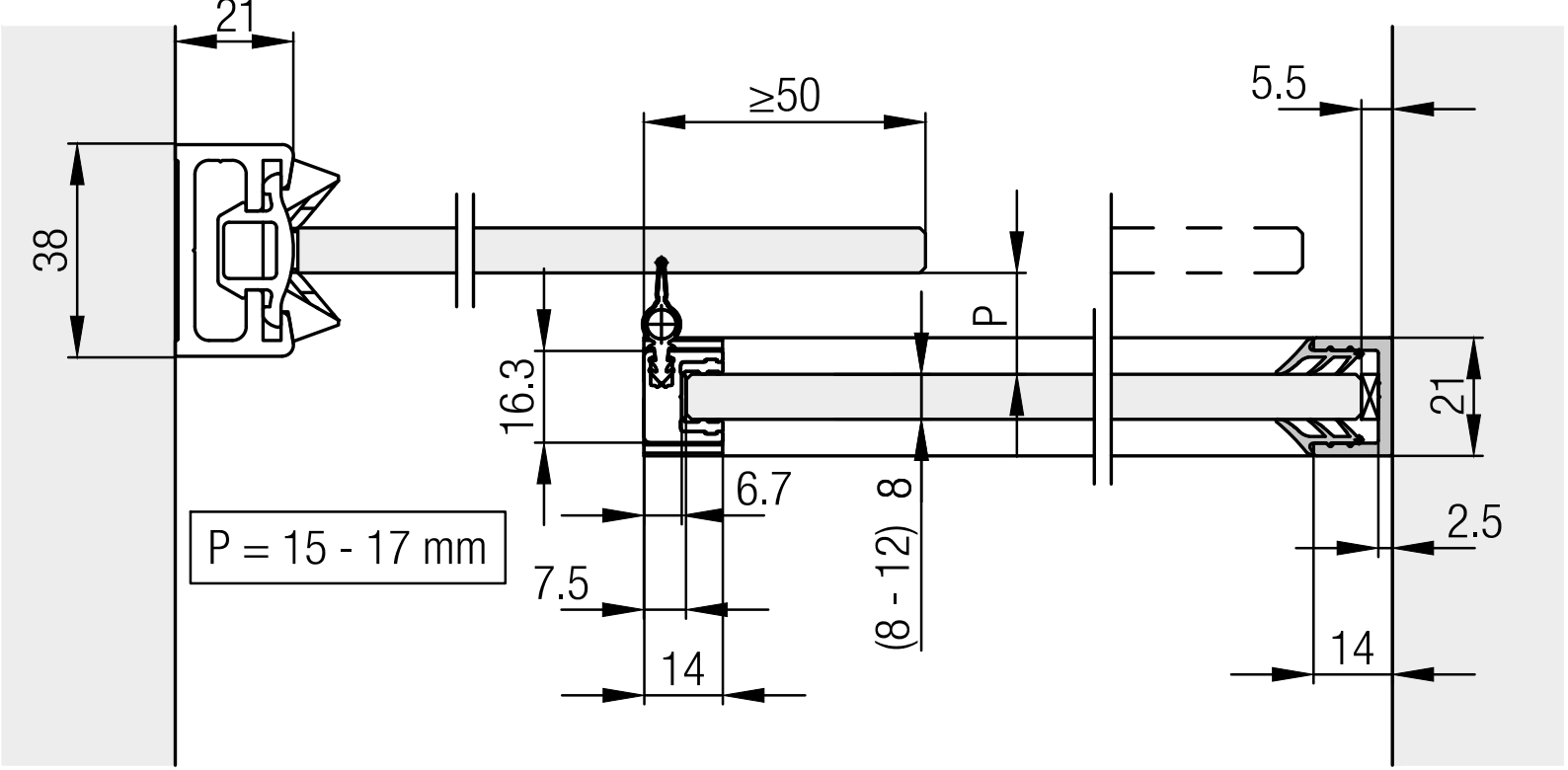
21
≥50
5.5
38
P
16.3
21
6.7
8
(8 - 12)
2.5
P = 15 - 17 mm
7.5
14
14