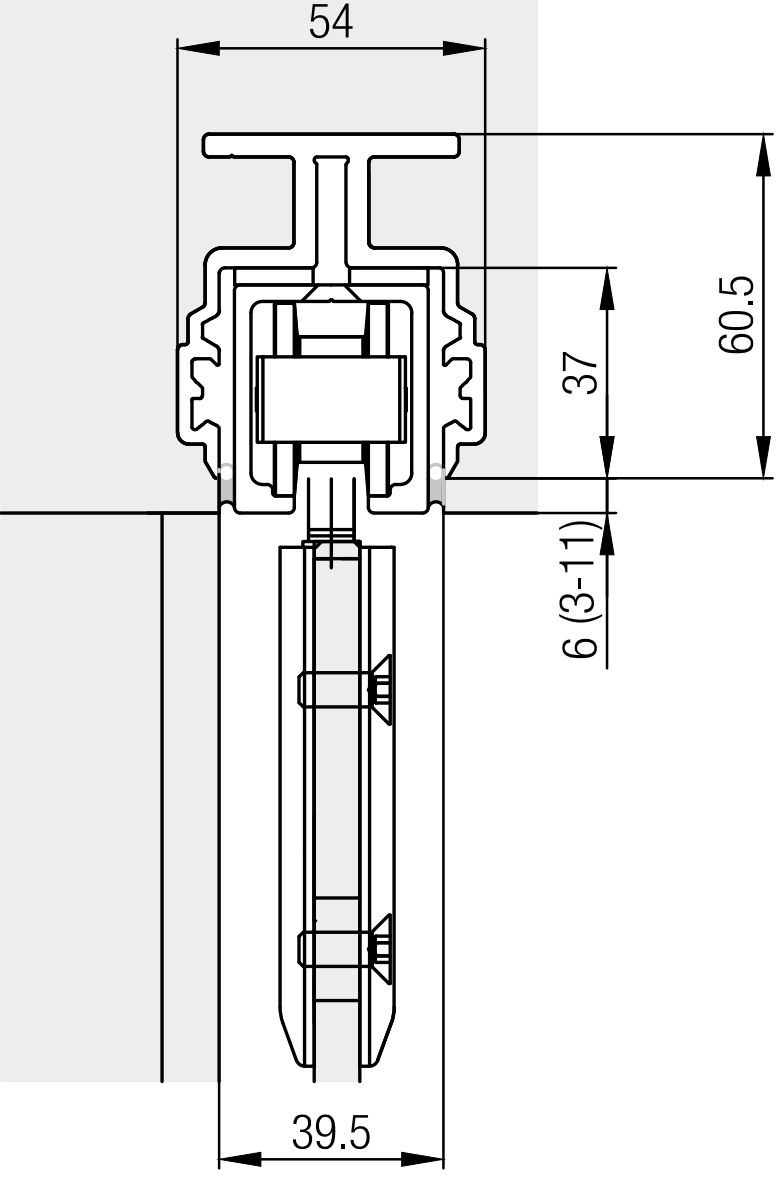
54
60.5
37
6 (3-11)
39.5

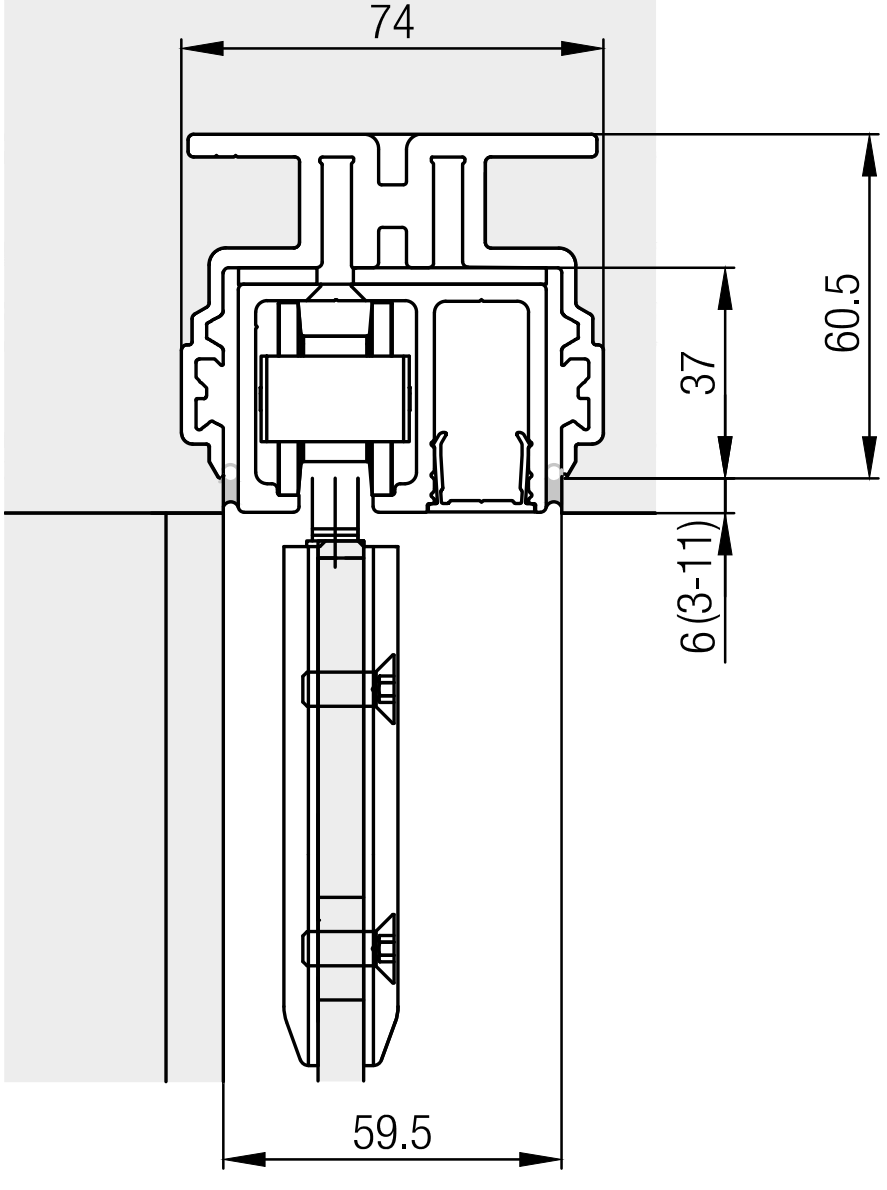
74
60.5
37
6(3-11)
59.5