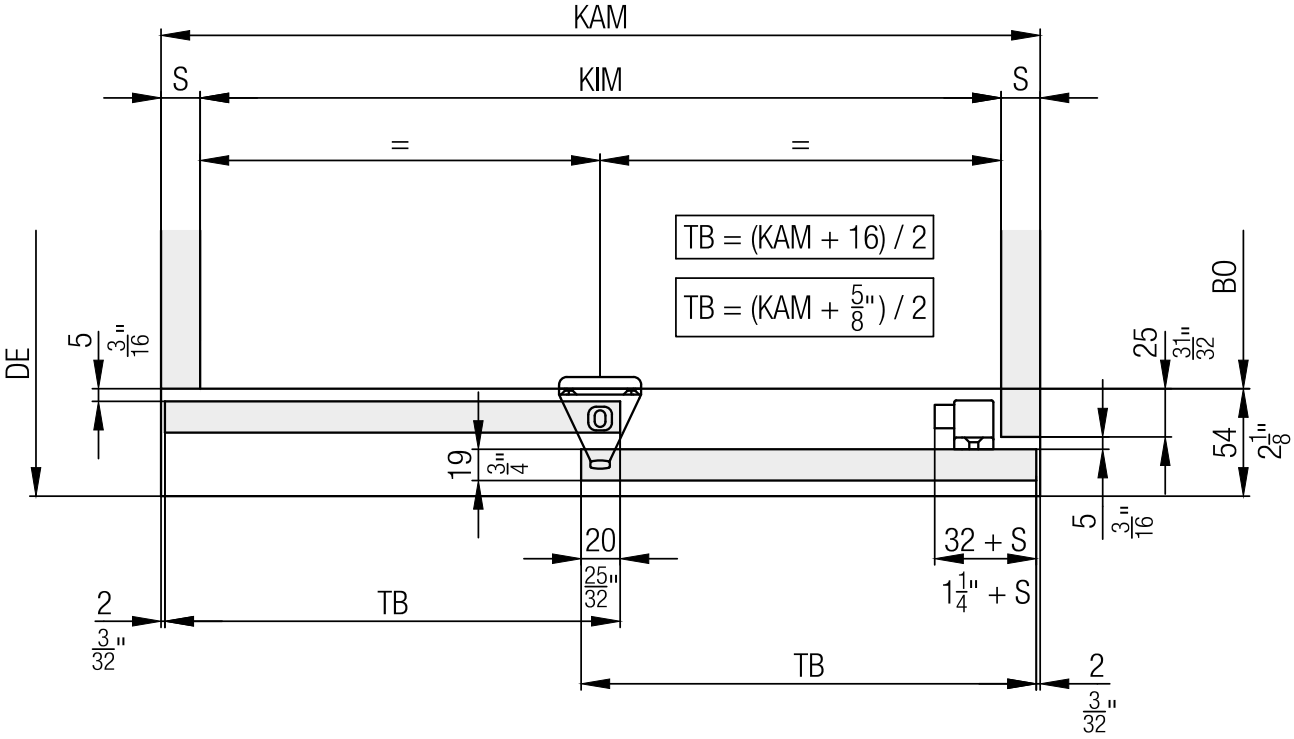
KAM
S
KIM
S
=
=
TB = (KAM + 16) / 2
TB = (KAM + 5/8") / 2
BO
DE
5
3/16"
25
31/32"
54
2 1/8"
19
3/4"
5
3/16"
20
25/32"
32 + S
1 1/4" + S
2
3/32"
TB
TB
2
3/32"

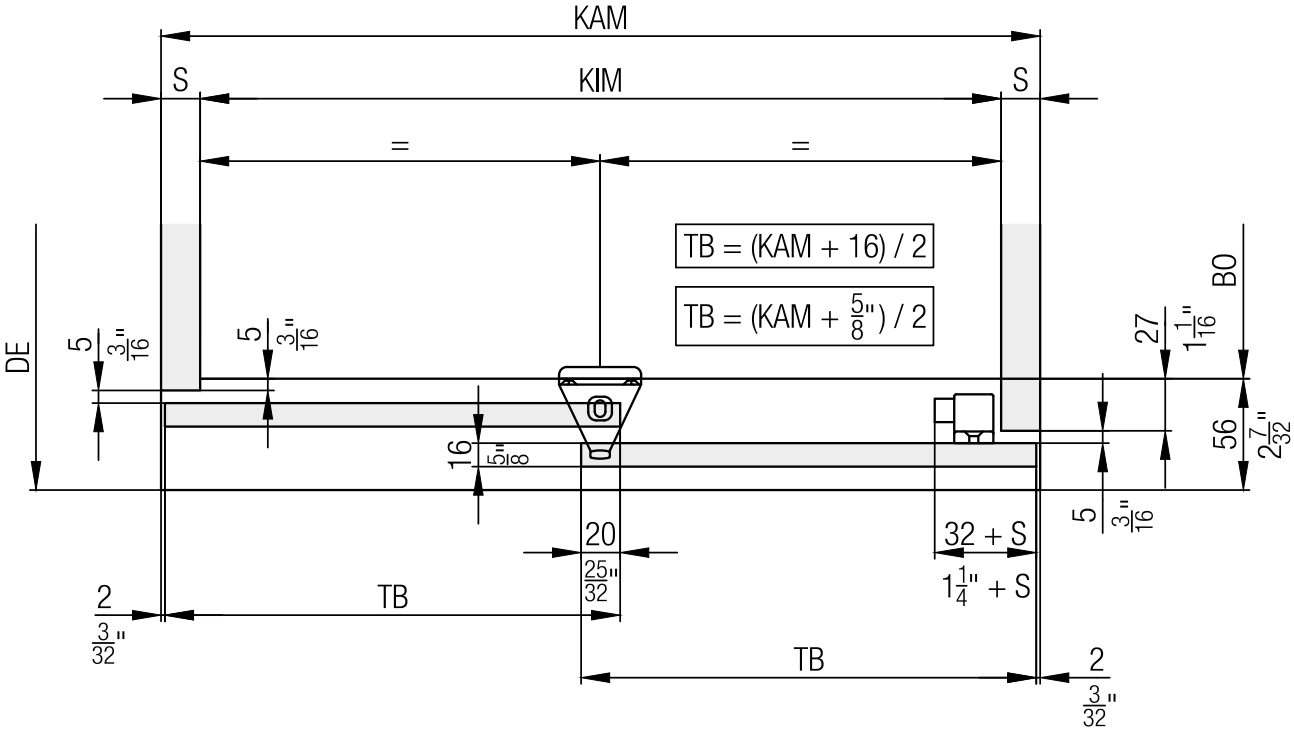
KAM
S
KIM
S
=
=
TB = (KAM + 16) / 2
TB = (KAM + 5/8") / 2
BO
DE
5
3/16"
5
3/16"
27
1 1/16"
56
2 7/32"
16
5/8"
5
3/16"
20
25/32"
32 + S
1 1/4" + S
2
3/32"
TB
TB
2
3/32"

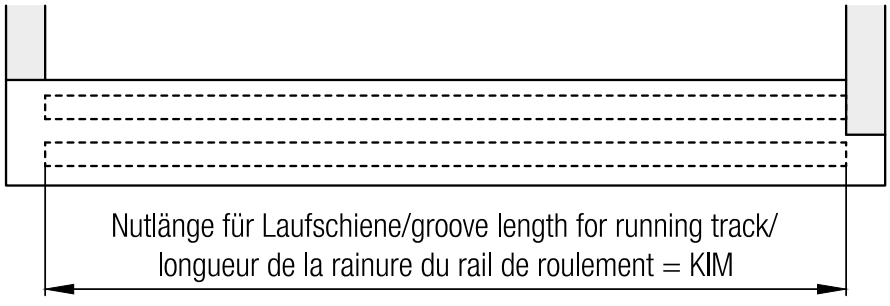
Nutlänge für Laufschiene/groove length for running track/
longueur de la rainure du rail de roulement = KIM