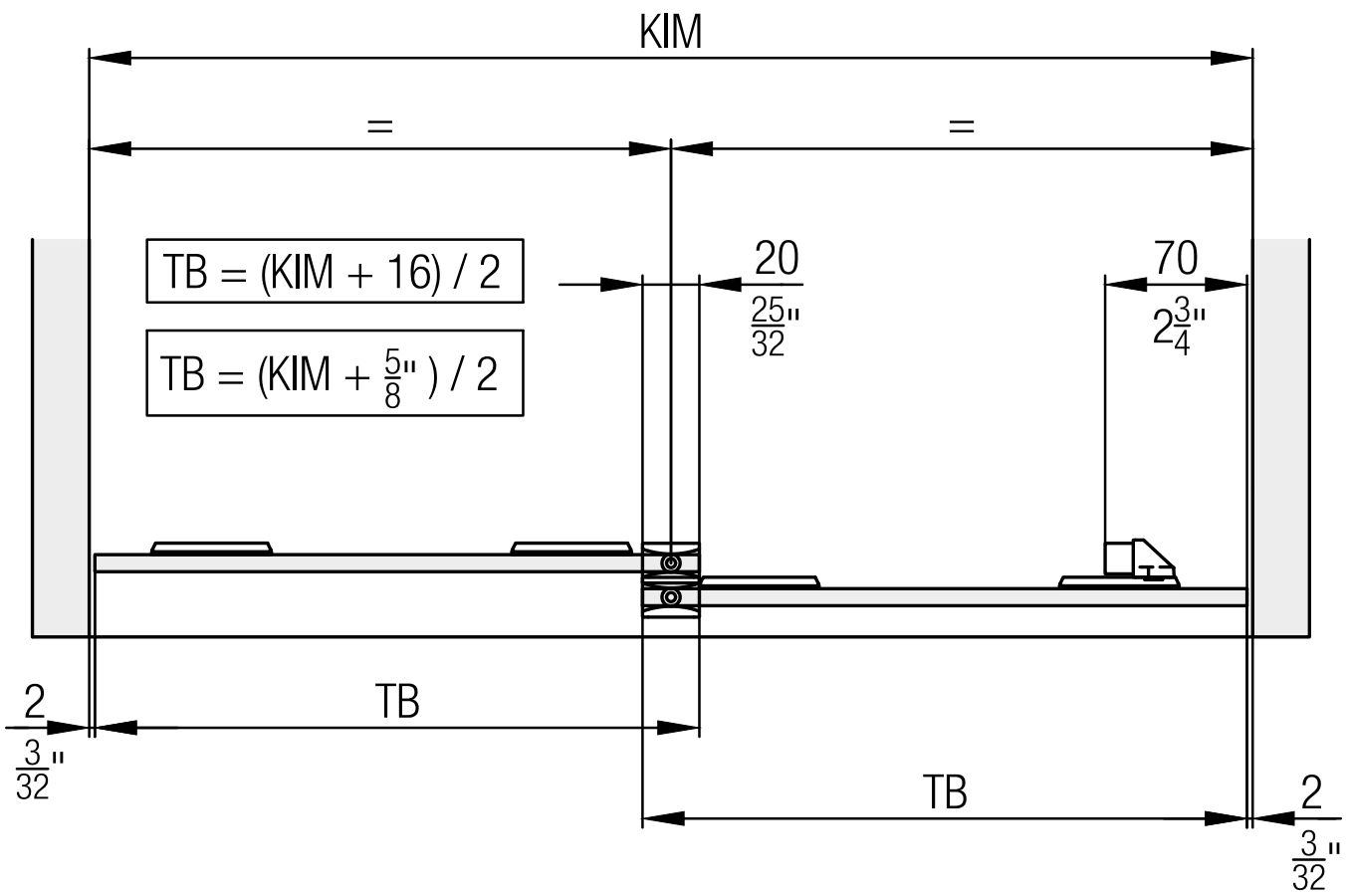
KIM
=
=
TB = (KIM + 16) / 2
TB = (KIM + 5/8") / 2
20
25/32"
70
2 3/4"
2
3/32"
TB
TB
2
3/32"