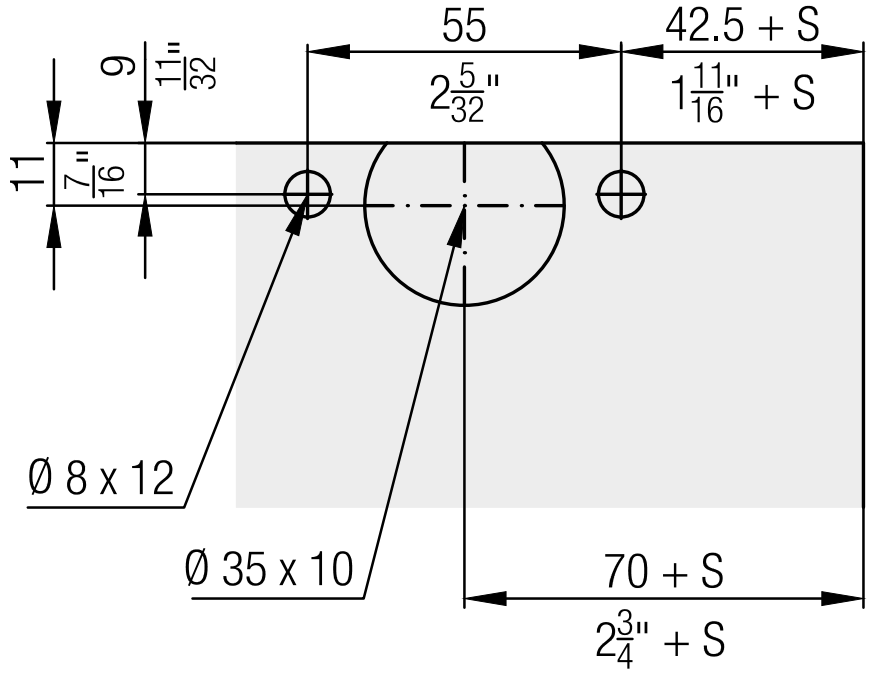
55
42.5 + S
9
11"/32
2 5/32"
1 11/16" + S
11
7"/16
Ø 8 x 12
Ø 35 x 10
70 + S
2 3/4" + S