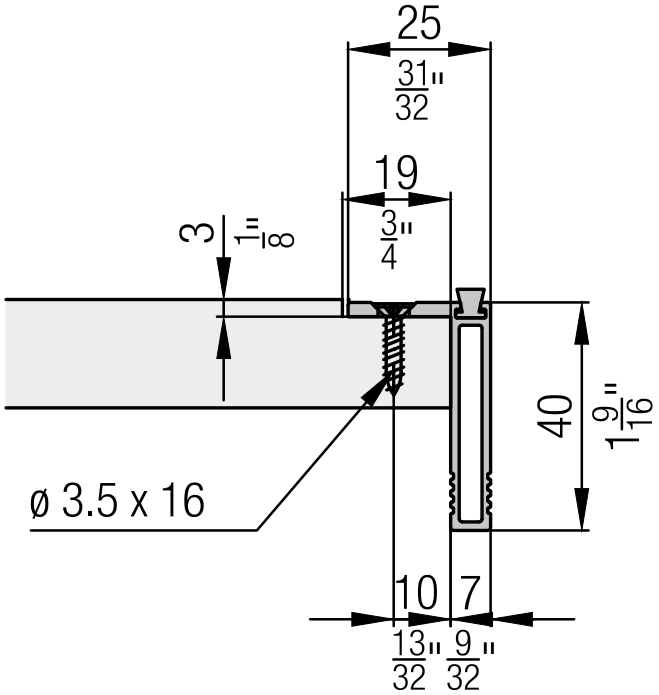
25
31/32"
19
3/4"
3
1/8"
40
1 9/16"
ø 3.5 x 16
10
7
13/32"
9/32"