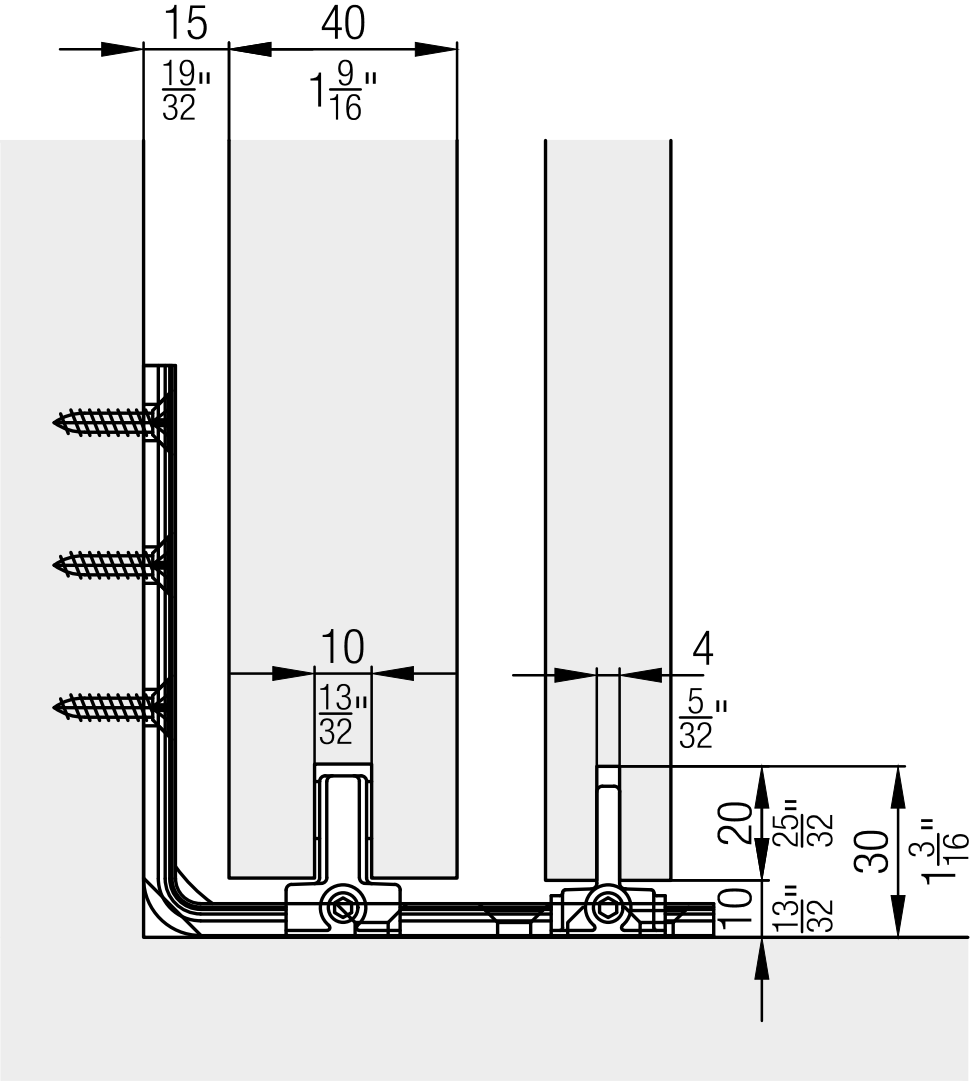
15
19/32"
40
1 9/16"
10
13/32"
4
5/32"
20
25/32"
30
1 3/16"
10
13/32"

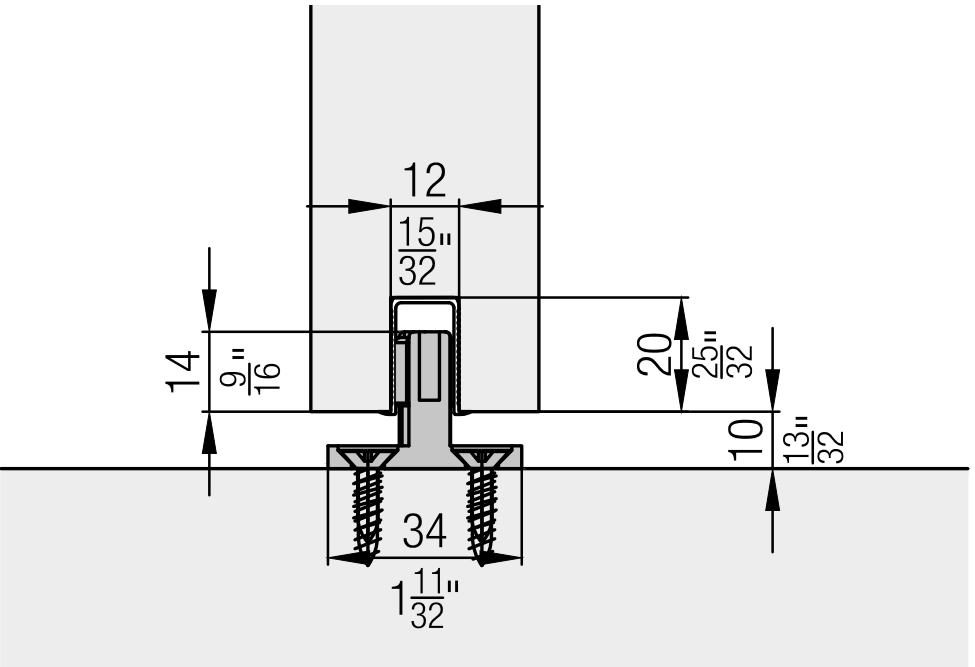
12
15/32"
14
9/16"
20
25/32"
10
13/32"
34
1 11/32"