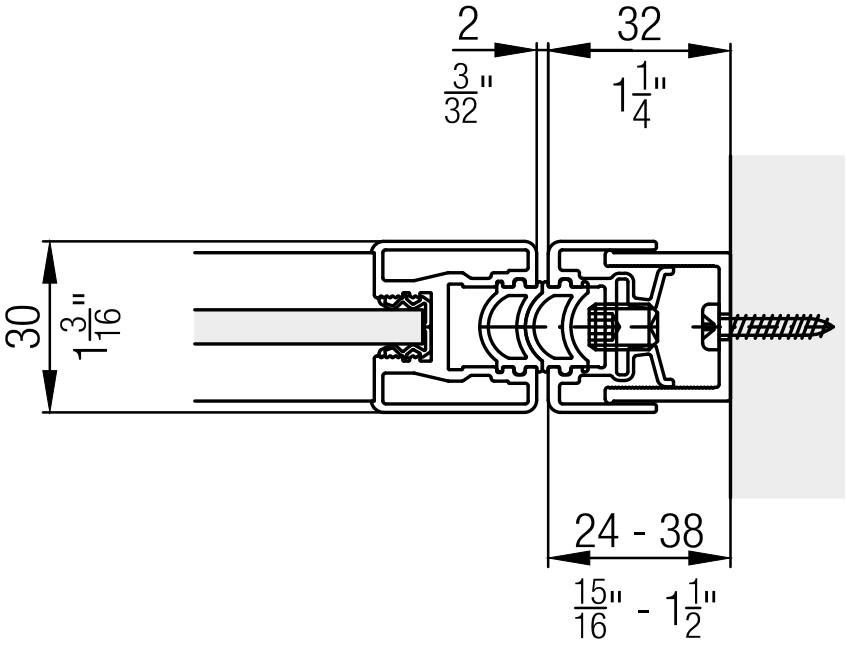
2
3/32"
32
1 1/4"
30
1 3/16"
24 - 38
15/16" - 1 1/2"