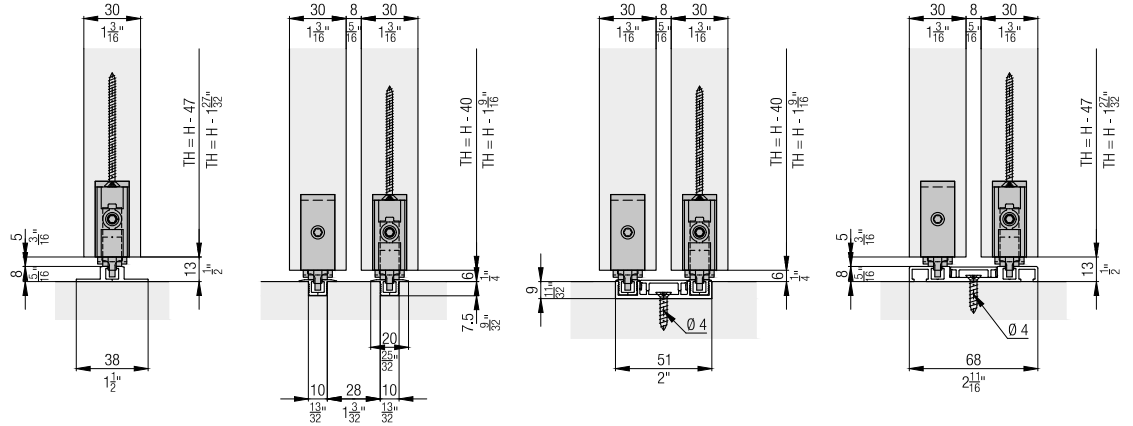
30
1 3/16"
TH = H - 47
TH = H - 1 27/32"
5
3/16"
8
5/16"
13
1/2"
38
1 1/2"
30
1 3/16"
8
5/16"
30
1 3/16"
TH = H - 40
TH = H - 1 9/16"
6
1/4"
7.5
9/32"
20
25/32"
10
13/32"
28
1 3/32"
10
13/32"
30
1 3/16"
8
5/16"
30
1 3/16"
TH = H - 40
TH = H - 1 9/16"
9
11/32"
6
1/4"
Ø 4
51
2"
30
1 3/16"
8
5/16"
30
1 3/16"
TH = H - 47
TH = H - 1 27/32"
5
3/16"
8
5/16"
13
1/2"
Ø 4
68
2 11/16"