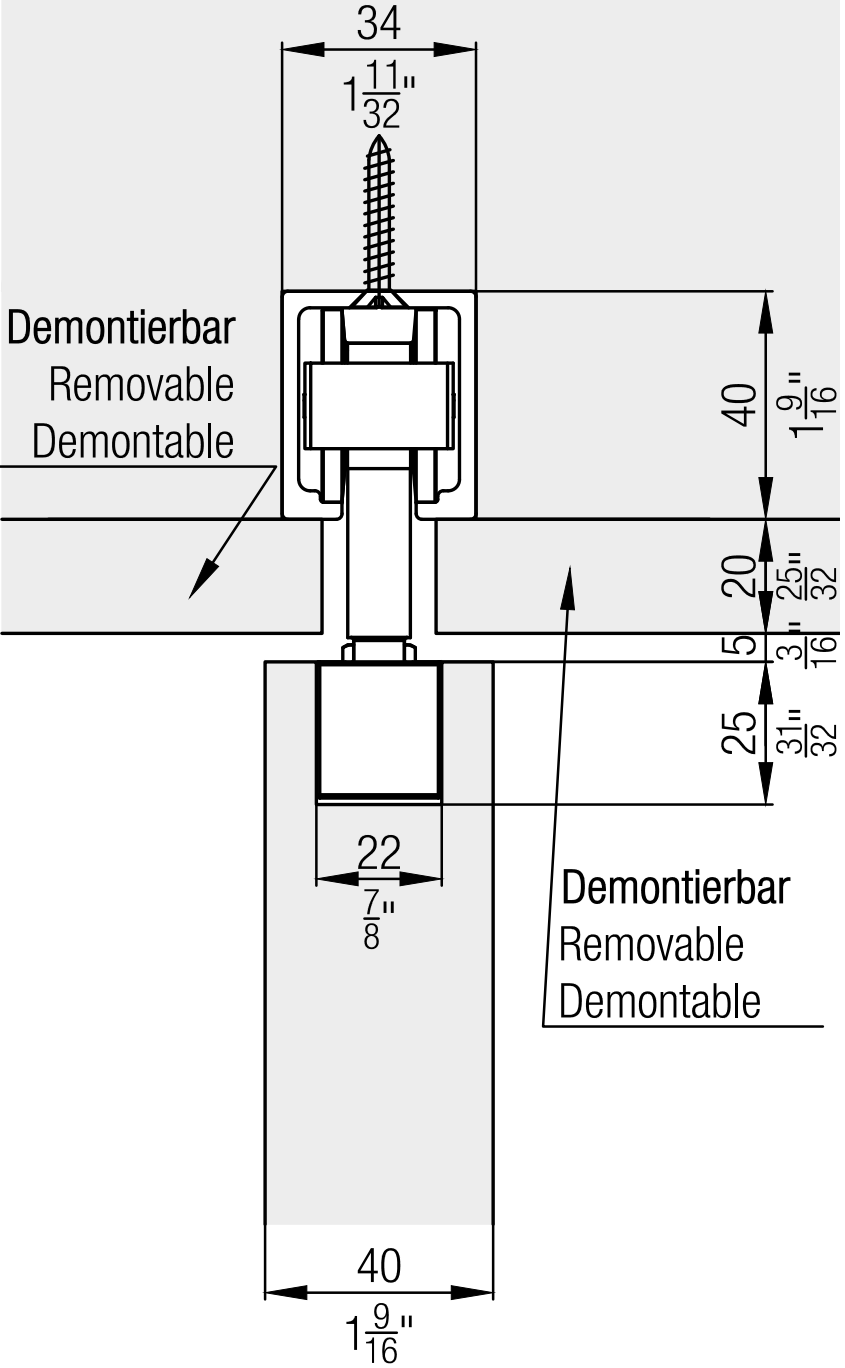
34
1 11/32"
Demontierbar
Removable
Demontable
40
1 9/16"
20
25/32"
5
3/16"
25
31/32"
22
7/8"
Demontierbar
Removable
Demontable
40
1 9/16"