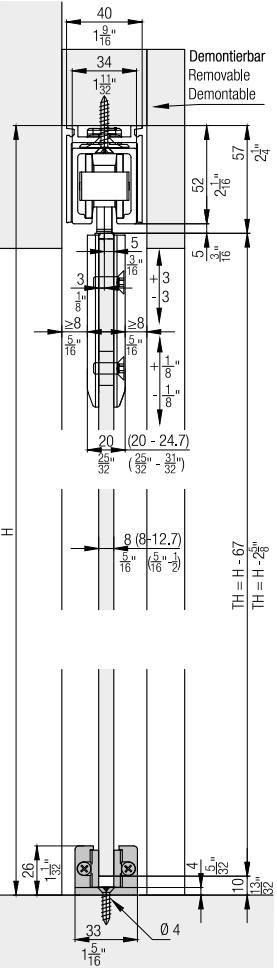
40
1 9/16"
34
1 11/32"
Demontierbar
Removable
Demontable
57
2 1/4"
52
2 1/16"
5
3/16"
5
3/16"
3
1/8"
3
3
≥8
≥8
5/16"
5/16"
1/8"
1/8"
20 (20 - 24.7)
25/32" (25/32" - 31/32")
8 (8-12.7)
5/16" (5/16" - 1/2")
H
TH = H - 67
TH = H - 2 13/16"
26
1 1/32"
4
5/32"
10
13/32"
33
1 5/16"
Ø 4

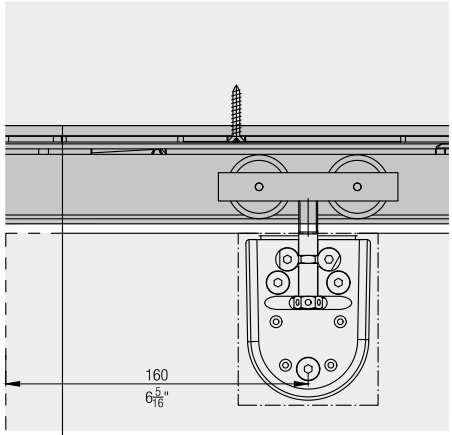
160
6 5/16"

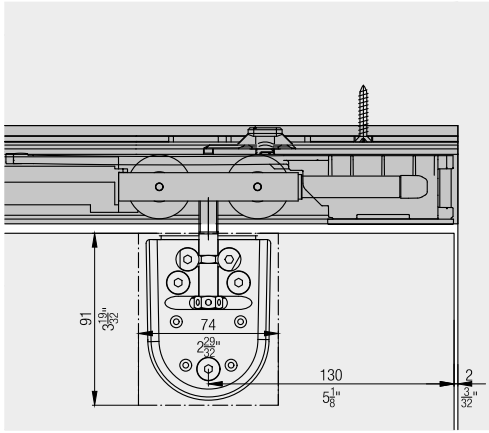
91
3 19/32"
74
2 29/32"
130
5 1/8"
2
3/32"

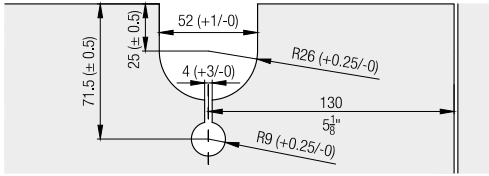
52 (+1/-0)
25 (± 0.5)
71.5 (± 0.5)
R26 (+0.25/-0)
4 (+3/-0)
130
5 1/8"
R9 (+0.25/-0)

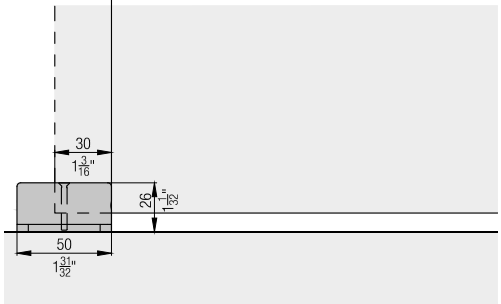
30
1 3/16"
26
1 1/32"
50
1 31/32"