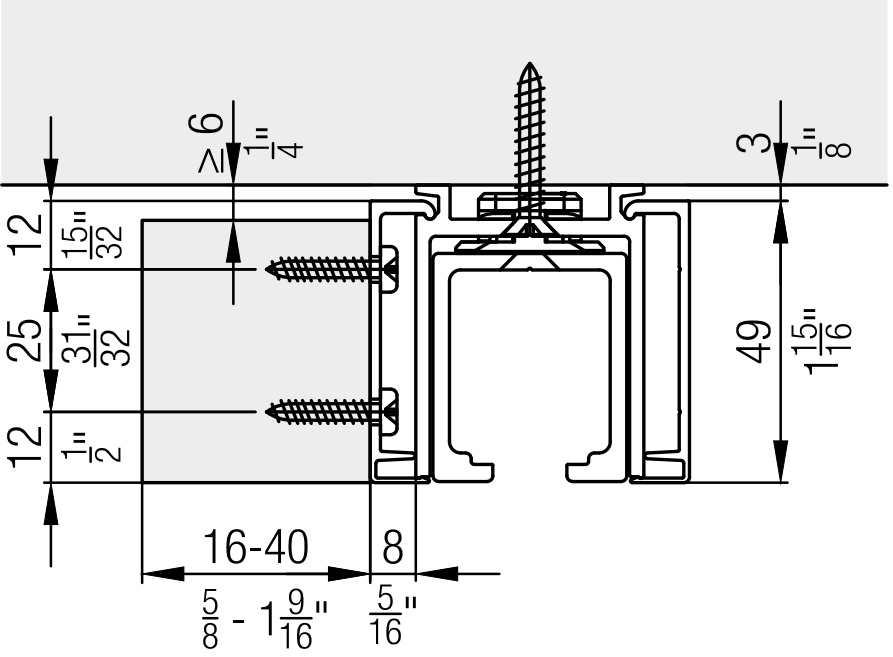
≥ 6
1/4"
3
1/8"
12
15/32"
25
31/32"
12
1/2"
49
1 15/16"
16-40
8
5/8 - 1 9/16"
5/16"