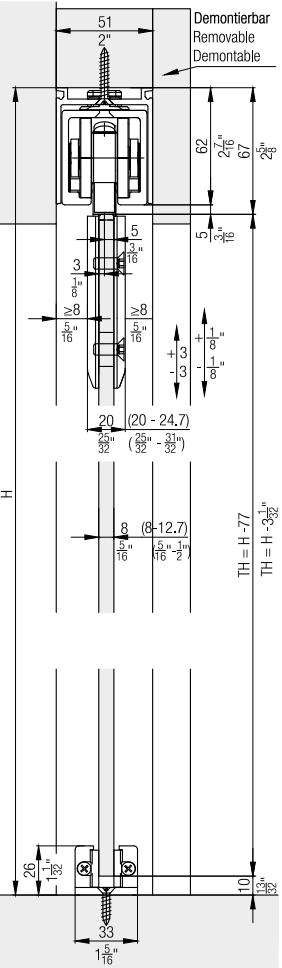
Demontierbar
Removable
Demontable
51
2"
62
2 7/16"
67
2 5/8"
5
3/16"
5
3/16"
3
1/8"
≥8
5/16"
≥8
5/16"
+ 1/8"
- 1/8"
+ 3
- 3
20
25/32"
(20 - 24.7)
(25/32" - 31/32")
H
8
5/16"
(8-12.7)
(5/16" - 1/2")
TH = H -77
TH = H - 3 1/32"
26
1 1/32"
10
13/32"
33
1 5/16"

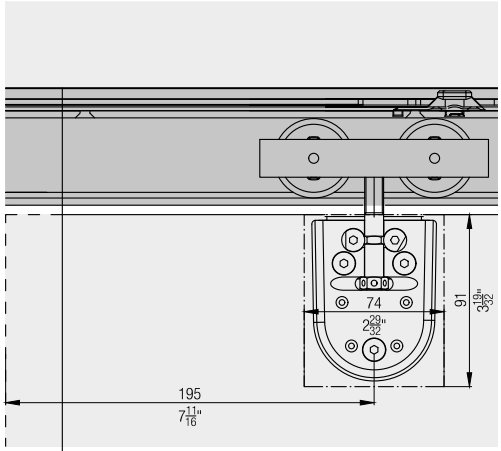
74
2 29/32"
91
3 19/32"
195
7 11/16"

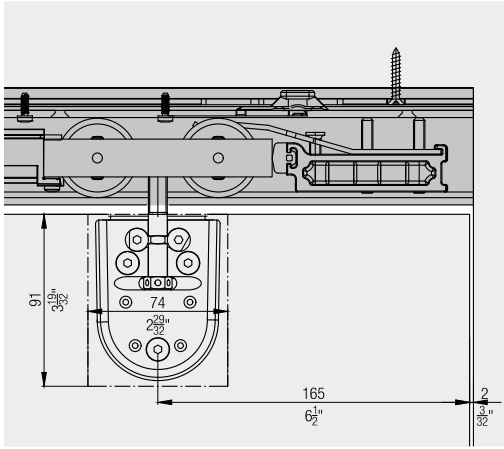
91
3 19/32"
74
2 29/32"
165
6 1/2"
2
3/32"

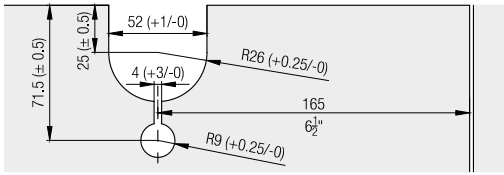
52 (+1/-0)
25 (± 0.5)
71.5 (± 0.5)
R26 (+0.25/-0)
4 (+3/-0)
165
6 1/2"
R9 (+0.25/-0)

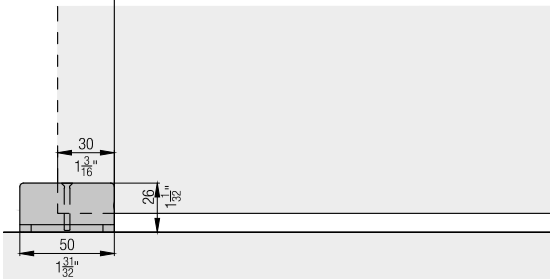
30
1 3/16"
26
1 1/32"
50
1 31/32"