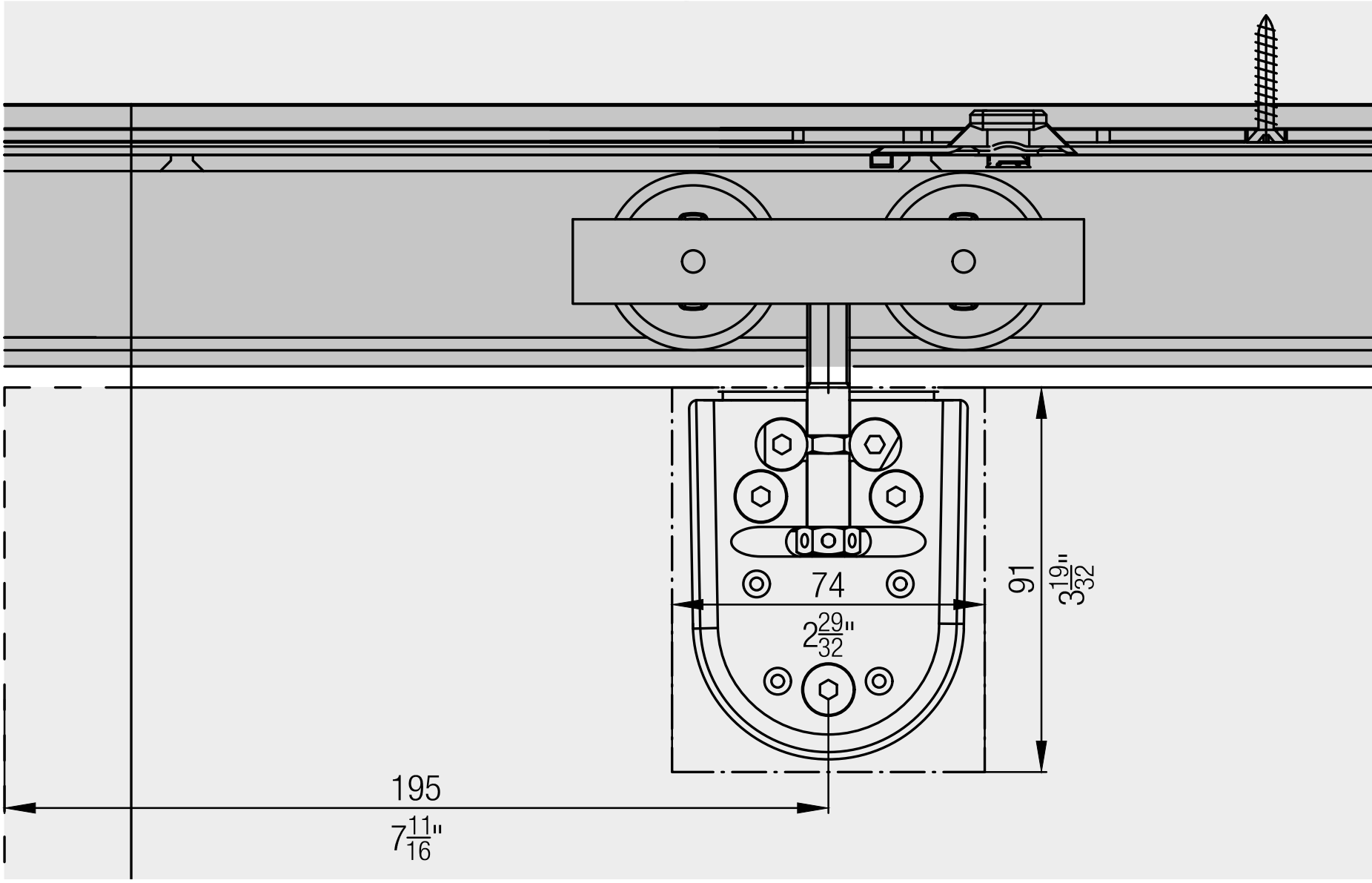
74
2 29/32"
91
3 19/32"
195
7 11/16"

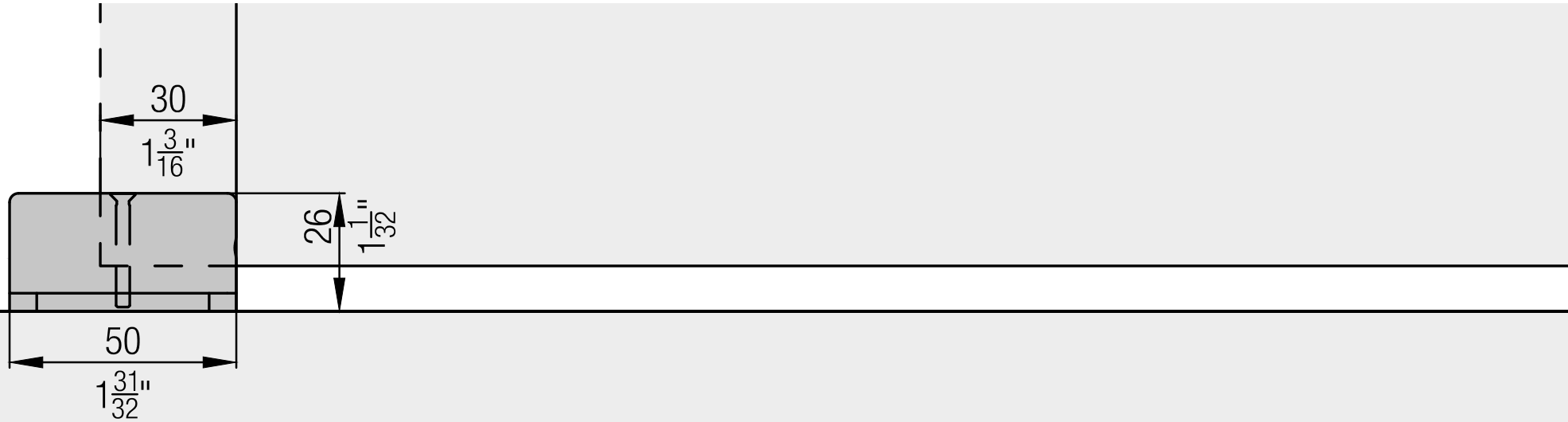
30
1 3/16"
26
1 1/32"
50
1 31/32"