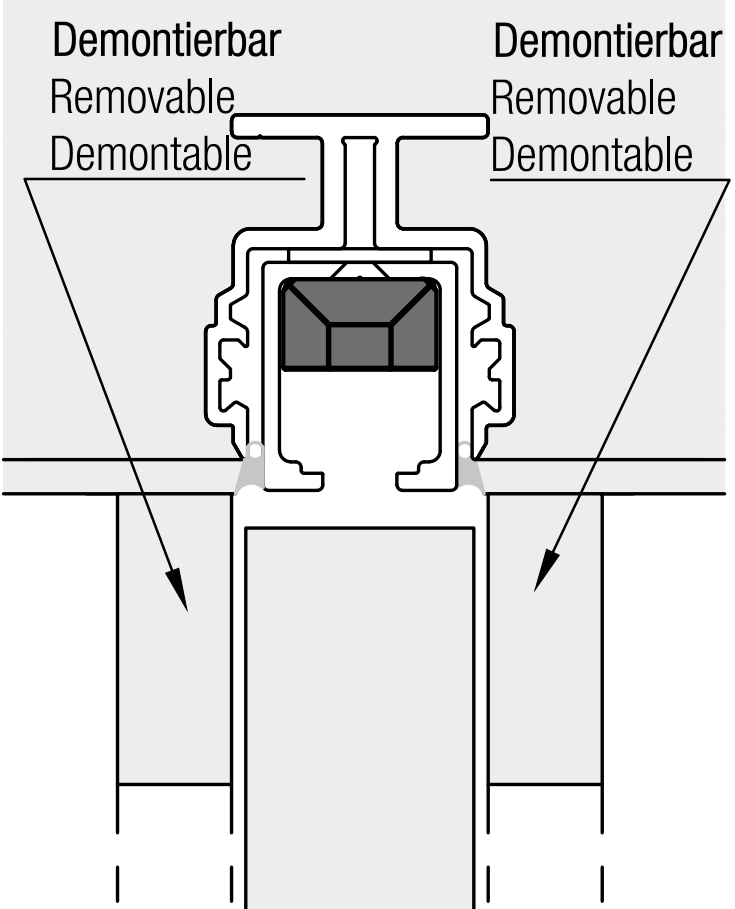
Demontierbar
Removable
Demontable
Demontierbar
Removable
Demontable

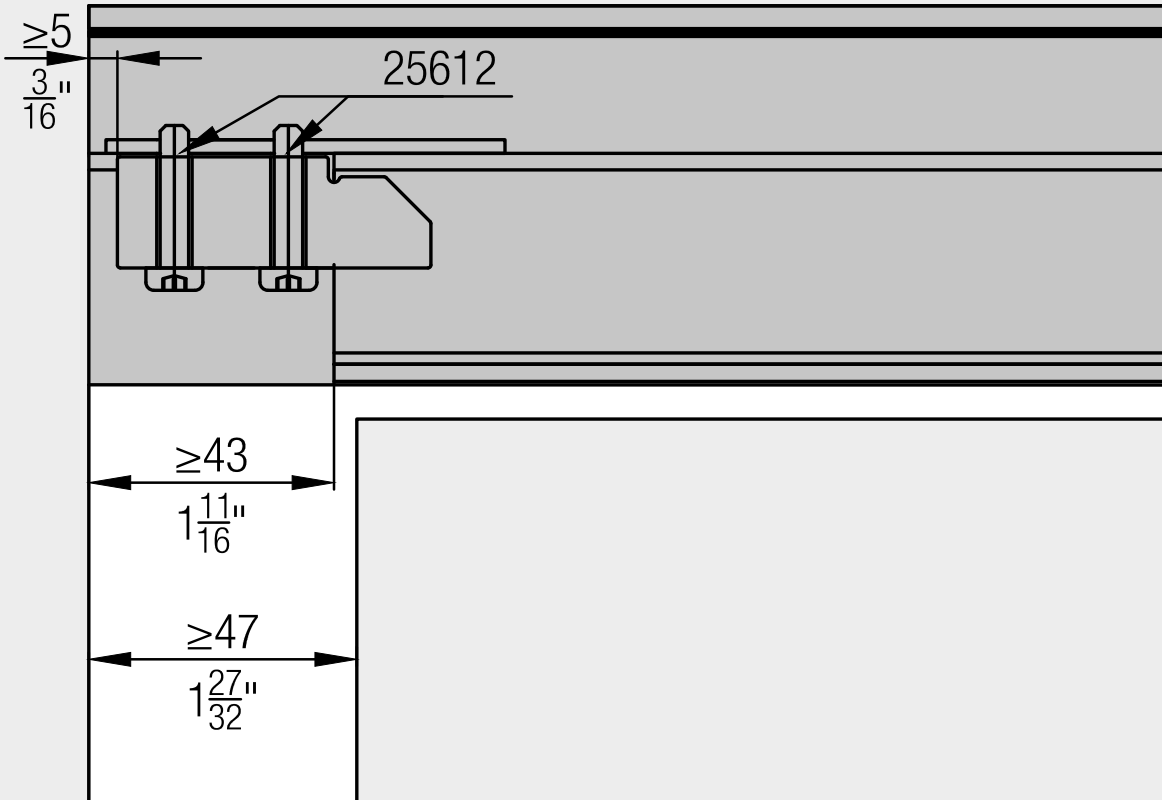
≥5
3/16"
25612
≥43
1 11/16"
≥47
1 27/32"