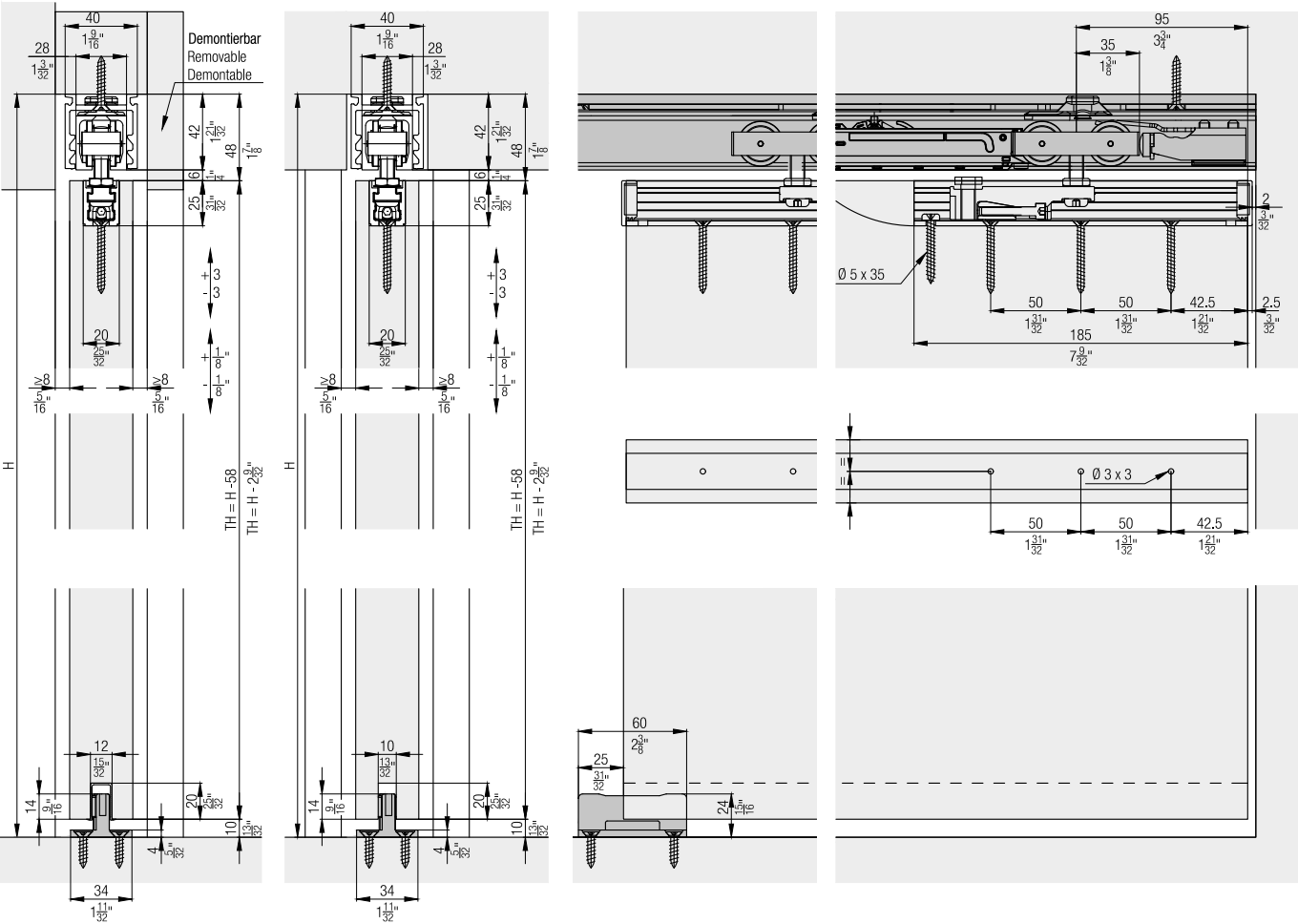

Demontierbar
Removable
Demontable
TH = H -58
TH = H - 2 9/32"
Ø 5 x 35
Ø 3 x 3