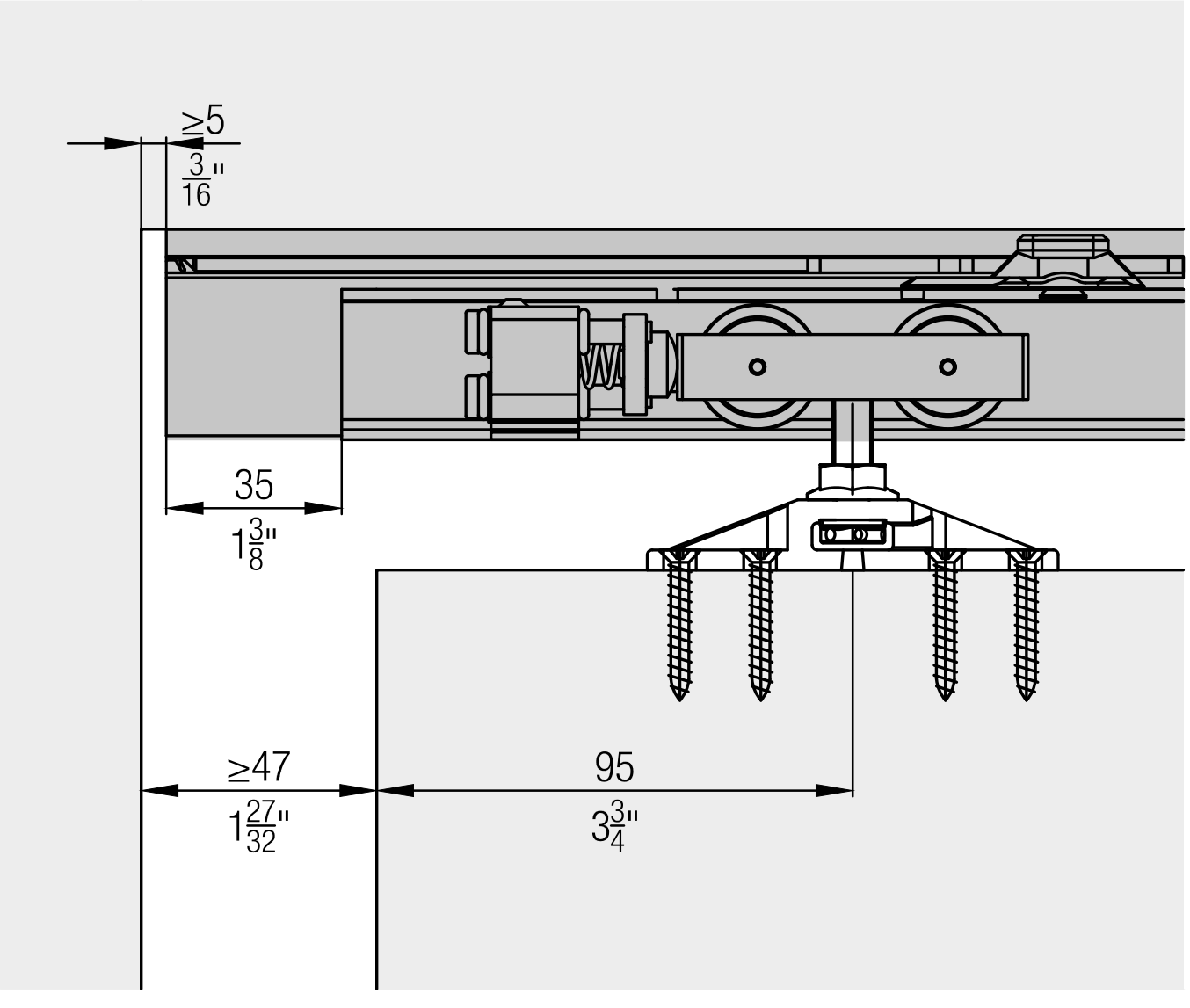
≥5
3/16"
35
1 3/8"
≥47
1 27/32"
95
3 3/4"