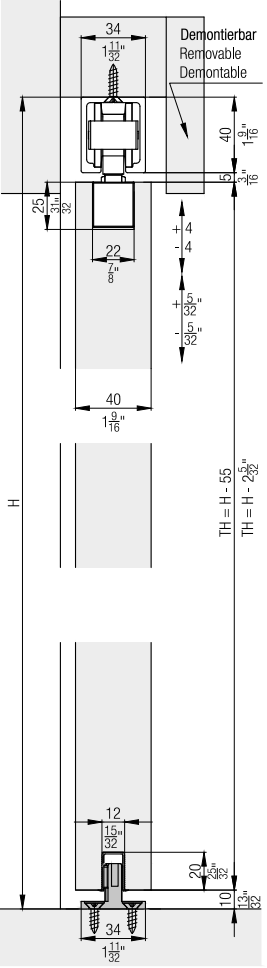
34
1 11/32"
Demontierbar
Removable
Demontable
40
1 9/16"
5
3/16"
25
31/32"
22
7/8"
+ 4
- 4
+ 5/32"
- 5/32"
40
1 9/16"
H
TH = H - 55
TH = H - 2 5/32"
12
15/32"
20
25/32"
10
13/32"
34
1 11/32"

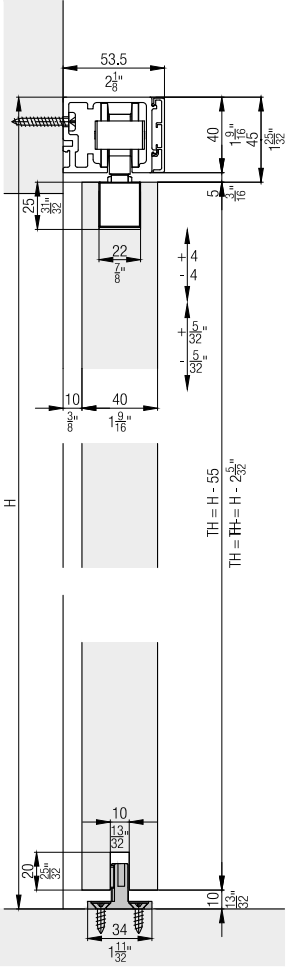
53.5
2 1/8"
40
1 9/16"
45
1 25/32"
5
3/16"
25
31/32"
22
7/8"
+ 4
- 4
+ 5/32"
- 5/32"
10
3/8"
40
1 9/16"
H
TH = H - 55
TH = H - 2 5/32"
10
13/32"
20
25/32"
10
13/32"
34
1 11/32"

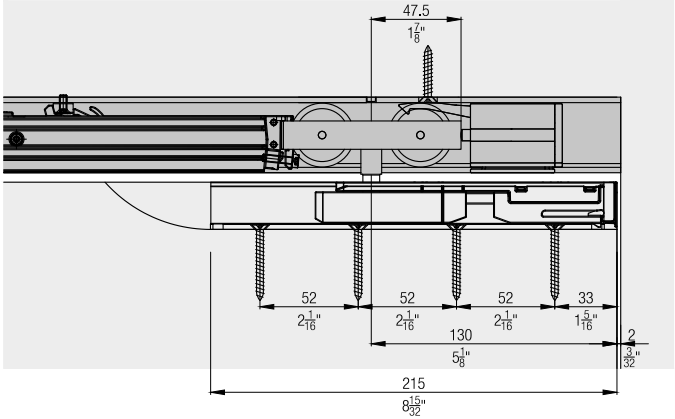
47.5
1 7/8"
52
2 1/16"
52
2 1/16"
52
2 1/16"
33
1 5/16"
130
5 1/8"
2
3/32"
215
8 15/32"

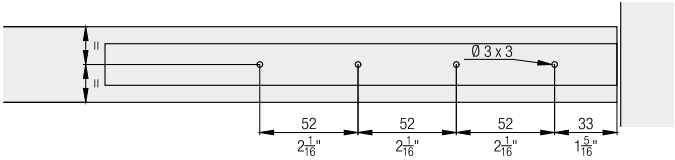
Ø 3 x 3
52
2 1/16"
52
2 1/16"
52
2 1/16"
33
1 5/16"

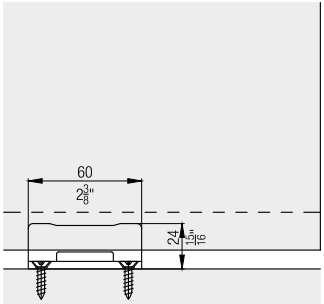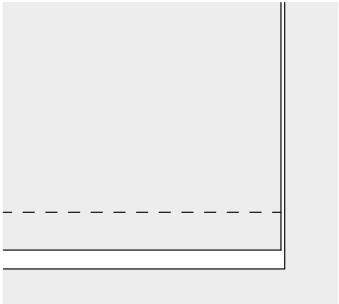
60
2 3/8"
24
15/16"