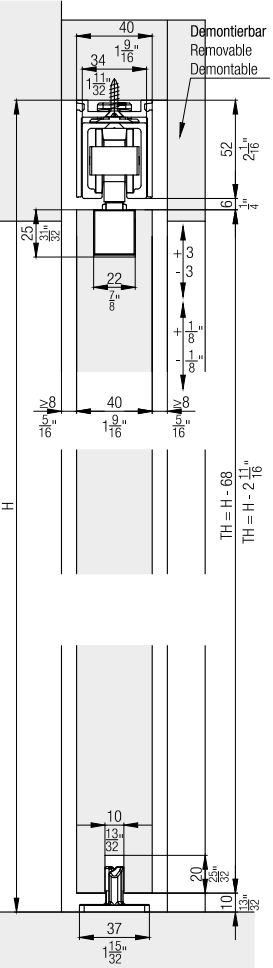
Demontierbar
Removable
Demontable
40
1 9/16"
34
1 11/32"
52
2 1/16"
6
1/4"
25
25/32"
22
7/8"
+3
-3
+1/8"
-1/8"
≥8
5/16"
40
1 9/16"
≥8
5/16"
H
TH = H - 68
TH = H - 2 11/16"
10
13/32"
20
25/32"
10
13/32"
37
1 15/32"

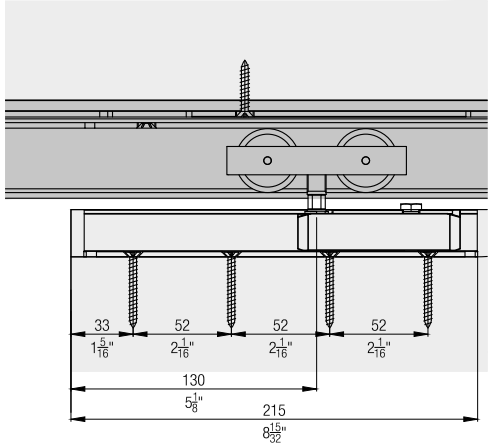
33
1 5/16"
52
2 1/16"
52
2 1/16"
52
2 1/16"
130
5 1/8"
215
8 15/32"

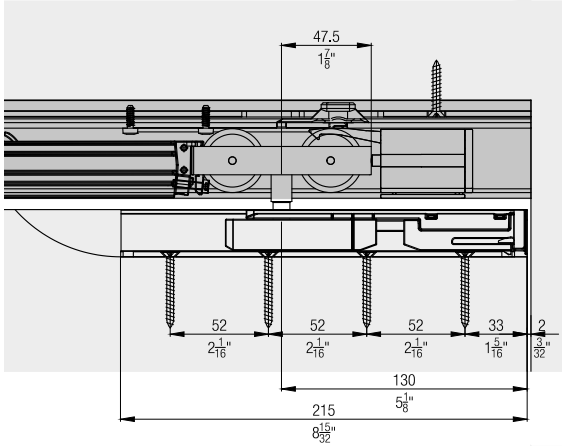
47.5
1 7/8"
52
2 1/16"
52
2 1/16"
52
2 1/16"
33
1 5/16"
2
3/32"
130
5 1/8"
215
8 15/32"

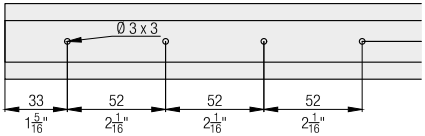
Ø 3 x 3
33
1 5/16"
52
2 1/16"
52
2 1/16"
52
2 1/16"

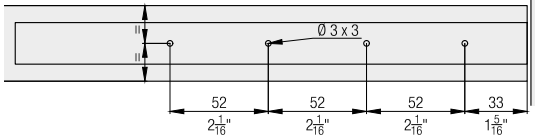
Ø 3 x 3
52
2 1/16"
52
2 1/16"
52
2 1/16"
33
1 5/16"

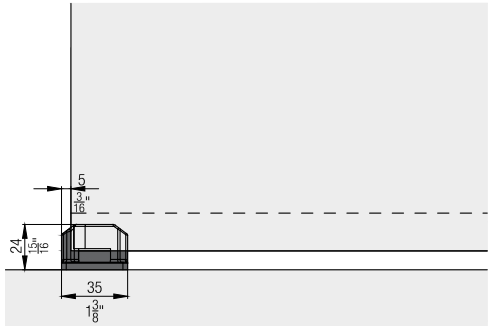
5
3/16"
24
15/16"
35
1 3/8"