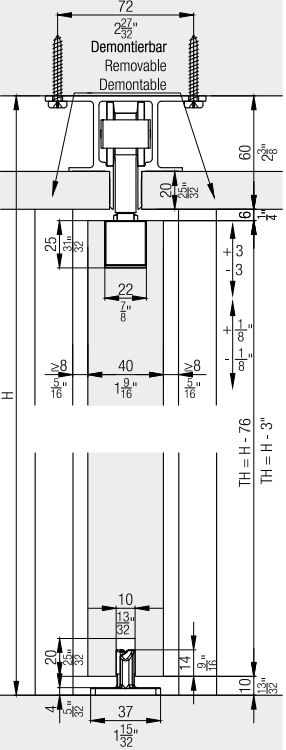
72
2 27/32"
Demontierbar
Removable
Demontable
60
2 3/8"
20
25
31/32"
22
7/8"
6
1/4"
3
3
1/8"
1/8"
8
40
8
5/16"
1 9/16"
5/16"
H
TH = H - 76
TH = H - 3"
10
13/32"
20
9/16"
14
10
13/32"
4
5/32"
37
1 15/32"

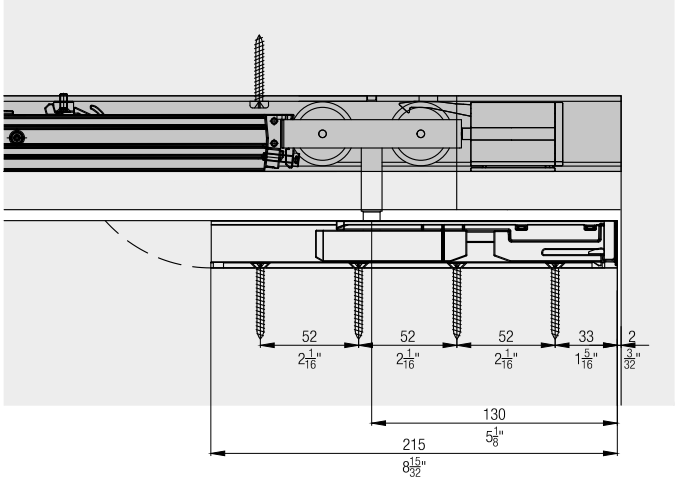
52
2 1/16"
52
2 1/16"
52
2 1/16"
33
1 5/16"
2
3/32"
130
5 1/8"
215
8 15/32"

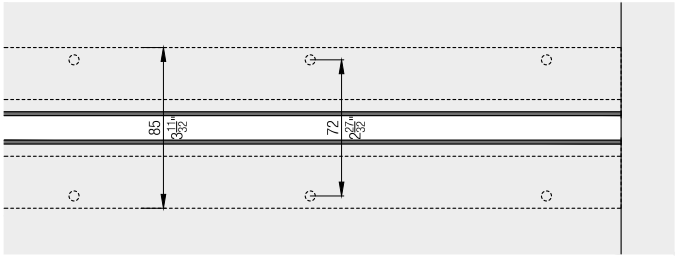
85
3 11/32"
72
2 27/32"