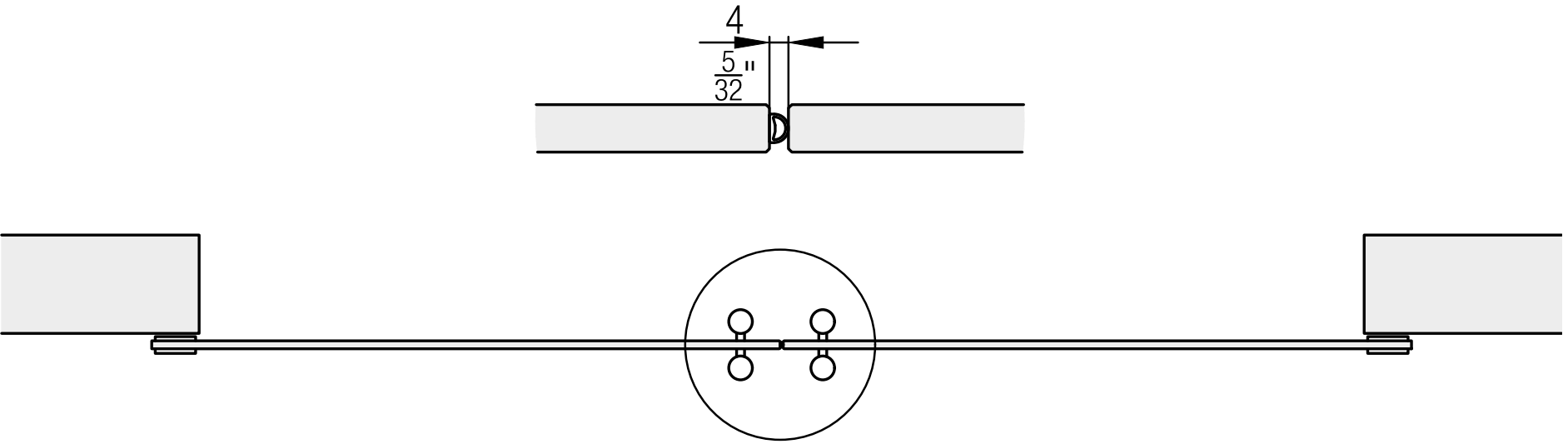
4
5/32"