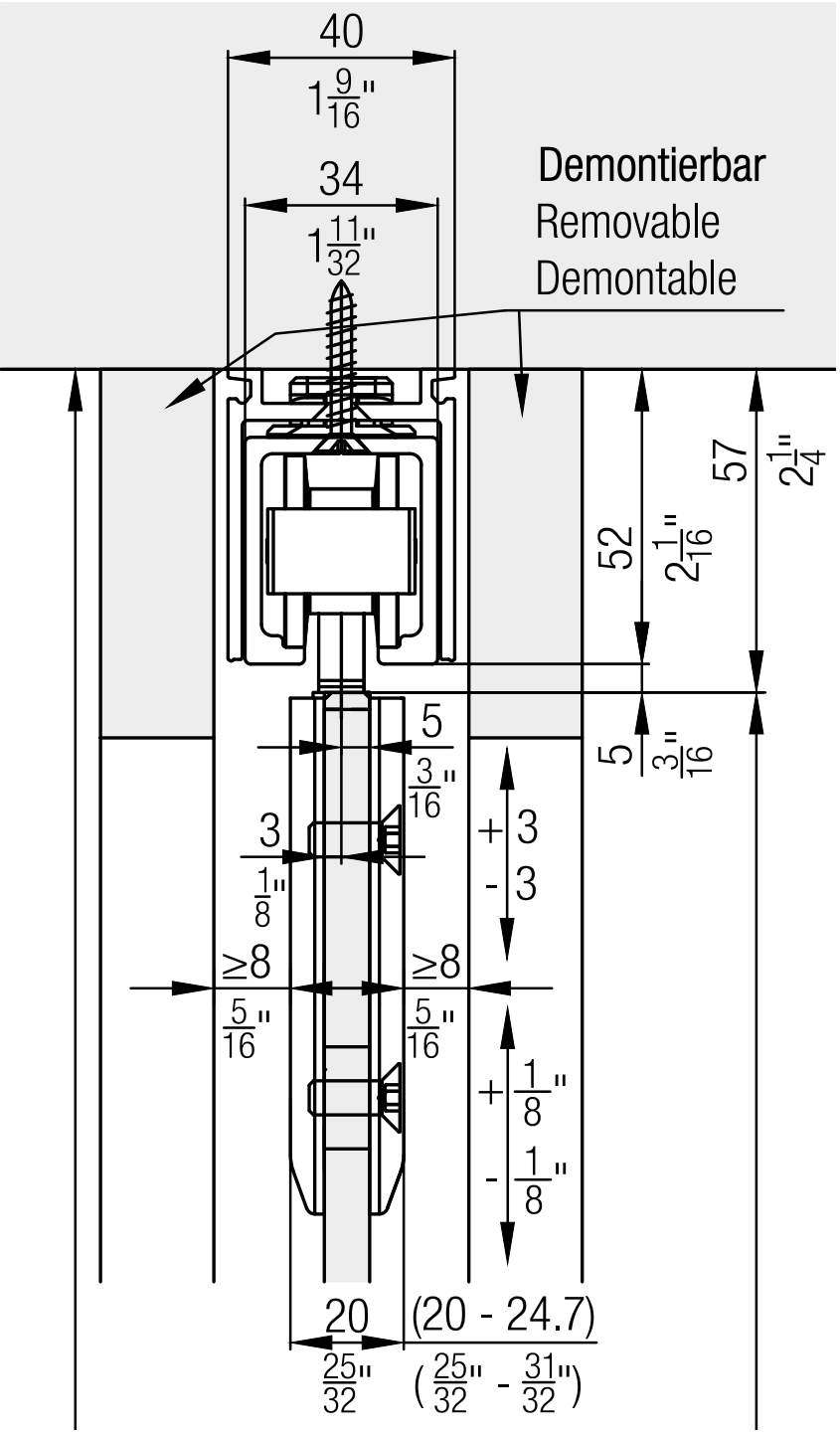
40
1 9/16"
34
1 11/32"
Demontierbar
Removable
Demontable
57
2 1/4"
52
2 1/16"
5
5
3/16"
3
1/8"
+ 3
- 3
≥8
≥8
5/16"
5/16"
+ 1/8"
- 1/8"
20
(20 - 24.7)
25/32"
(25/32" - 31/32")

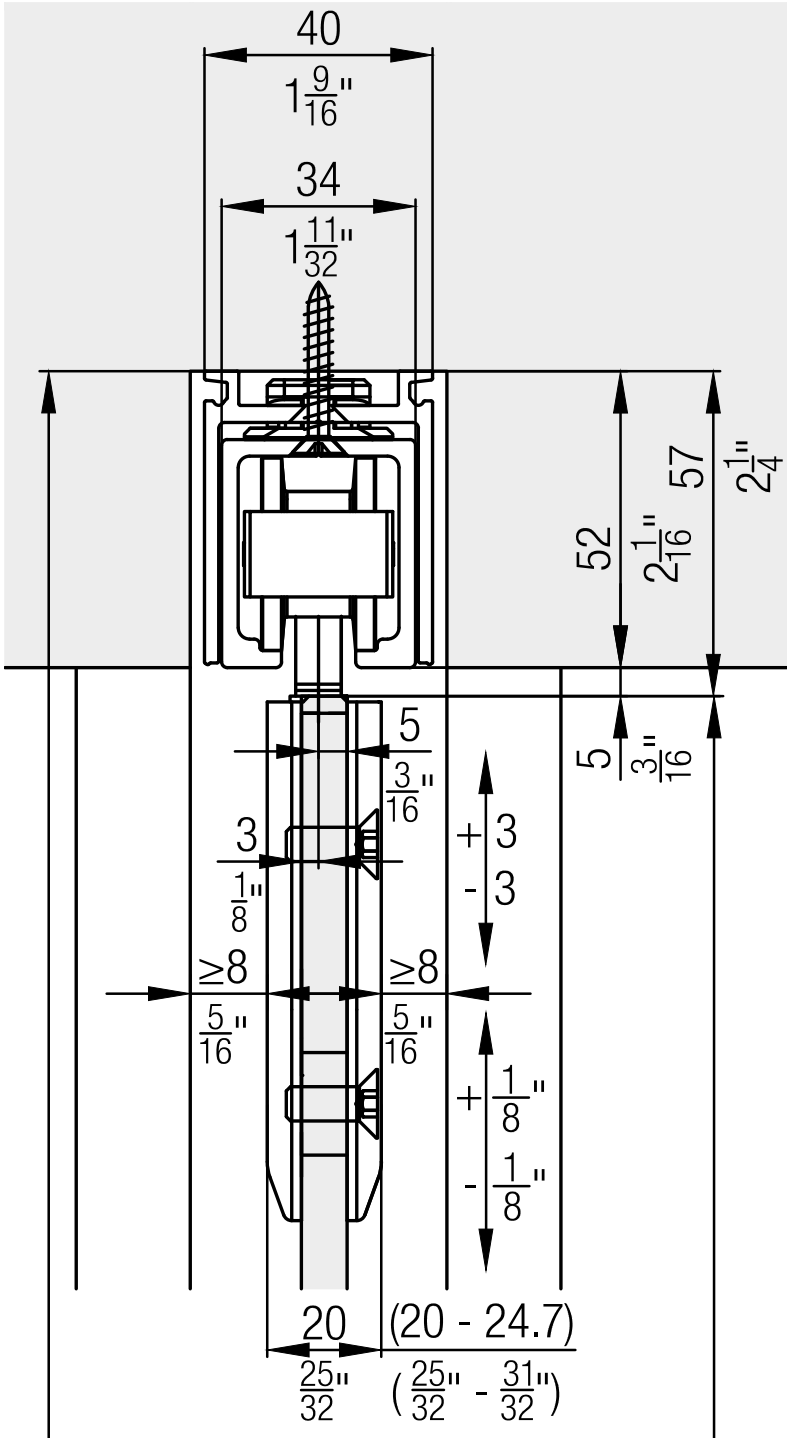
40
1 9/16"
34
1 11/32"
57
2 1/4"
52
2 1/16"
5
5
3/16"
3
1/8"
+ 3
- 3
≥8
≥8
5/16"
5/16"
+ 1/8"
- 1/8"
20
(20 - 24.7)
25/32"
(25/32" - 31/32")