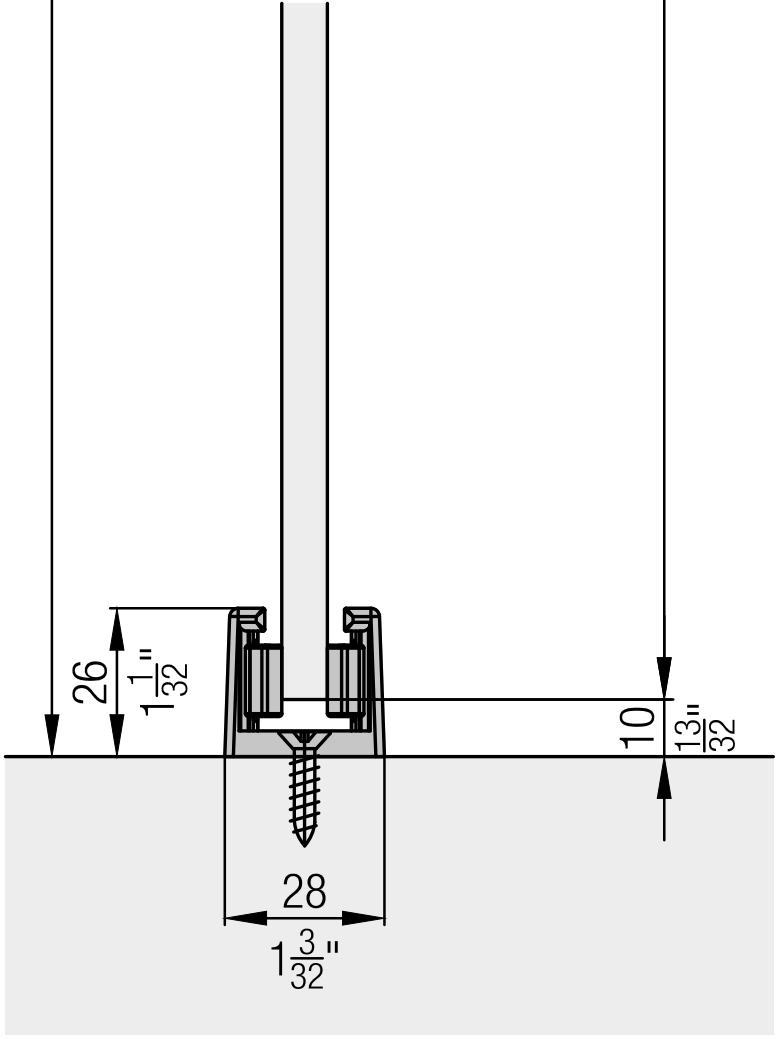
26
1 1/32"
10
13/32"
28
1 3/32"

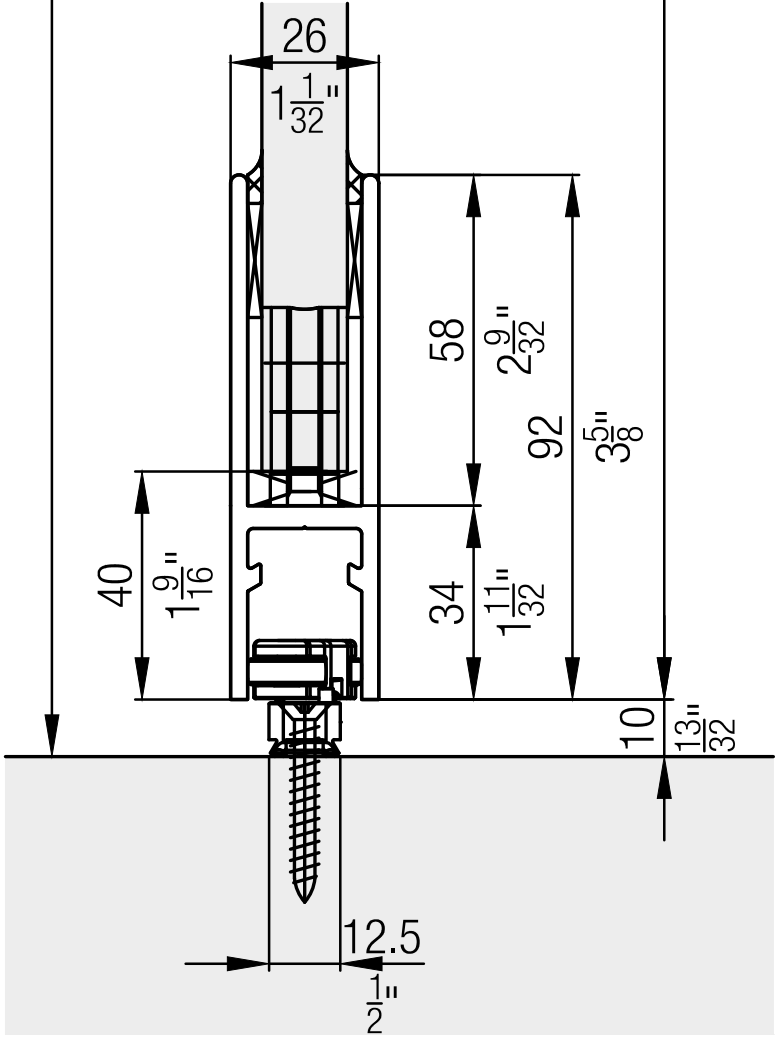
26
1 1/32"
58
2 9/32"
92
3 5/8"
40
1 9/16"
34
1 11/32"
10
13/32"
12.5
1/2"