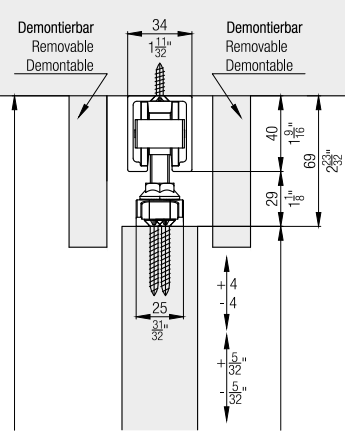
Demontierbar
Removable
Demontable
Demontierbar
Removable
Demontable
34
1 11/32"
40
1 9/16"
69
2 23/32"
29
1 1/8"
25
31/32"
+ 4
- 4
+ 5/32"
- 5/32"

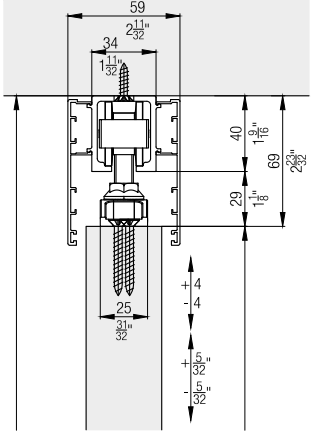
59
2 11/32"
34
1 11/32"
40
1 9/16"
69
2 23/32"
29
1 1/8"
25
31/32"
+ 4
- 4
+ 5/32"
- 5/32"

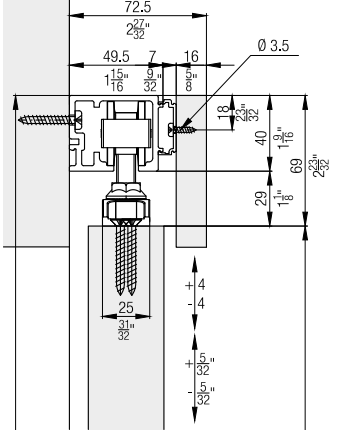
72.5
2 27/32"
49.5
1 15/16"
7
3/32"
16
5/8"
Ø 3.5
18
23/32"
40
1 9/16"
69
2 23/32"
29
1 1/8"
25
31/32"
+ 4
- 4
+ 5/32"
- 5/32"

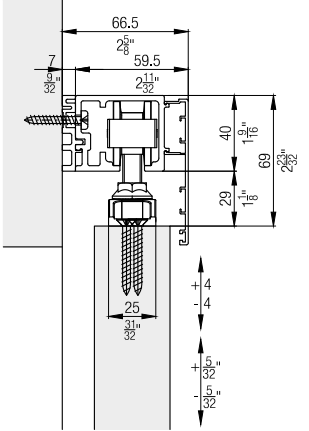
66.5
2 5/8"
7
9/32"
59.5
2 11/32"
40
1 9/16"
69
2 23/32"
29
1 1/8"
25
31/32"
+ 4
- 4
+ 5/32"
- 5/32"