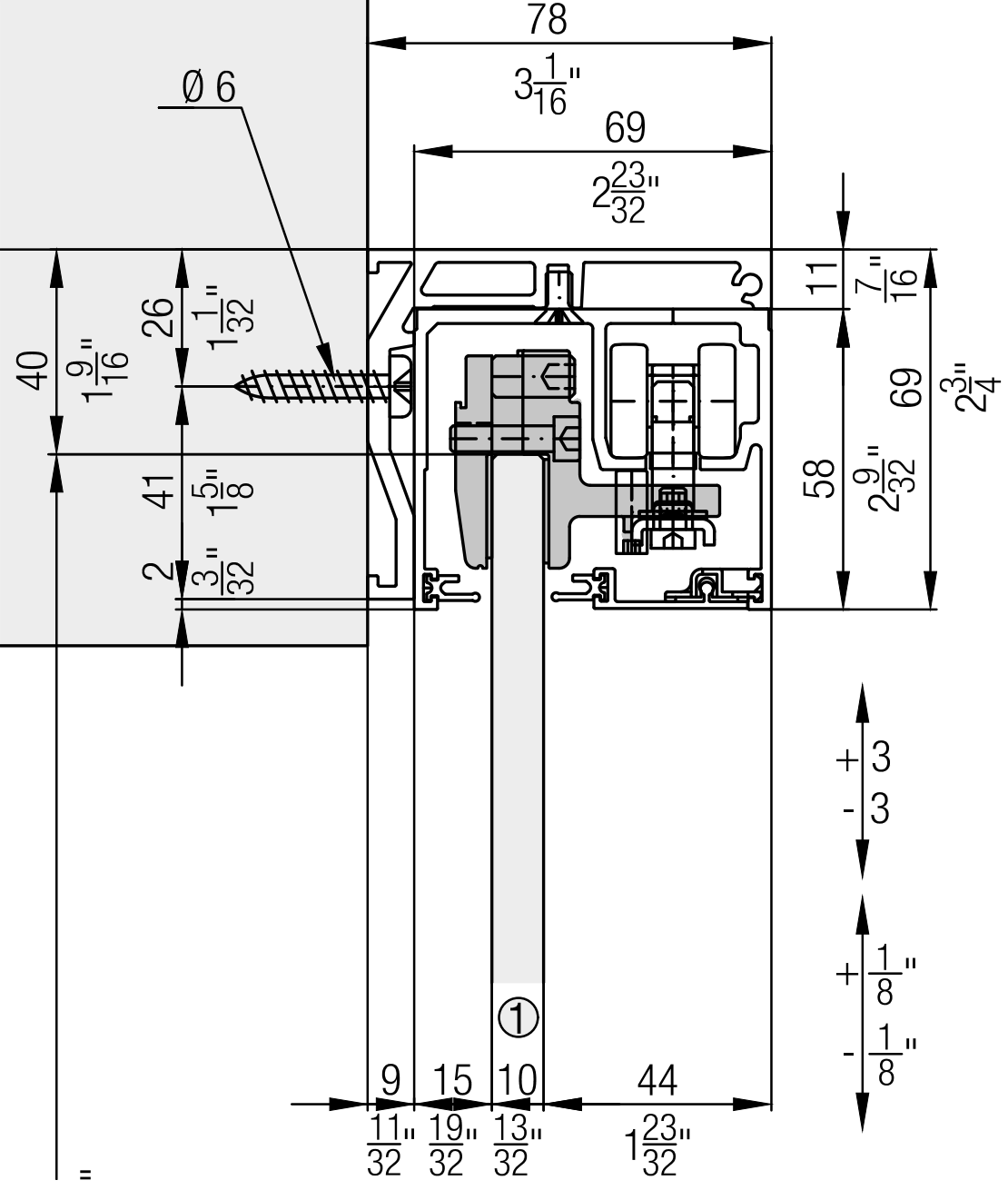
78
3 1/16"
69
2 23/32"
Ø 6
40
1 9/16"
26
1 1/32"
41
1 5/8"
2
3/32"
11
7/16"
69
2 3/4"
58
2 9/32"
+ 3
- 3
+ 1/8"
- 1/8"
1
9
15
10
44
11/32"
19/32"
13/32"
1 23/32"