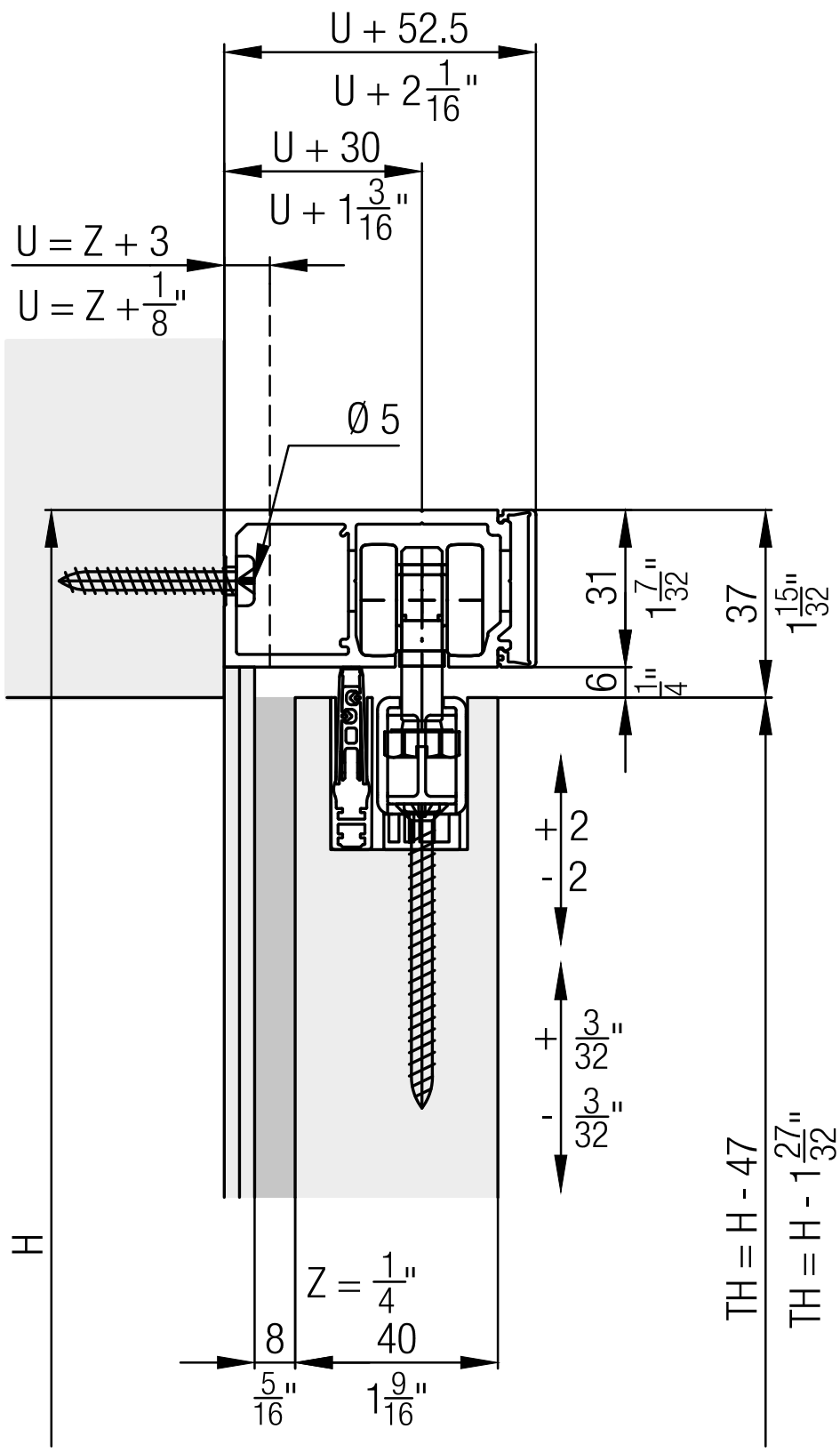
U + 52.5
U + 2 1/16"
U + 30
U + 1 3/16"
U = Z + 3
U = Z + 1/8"
Ø 5
31
1 7/32"
37
1 15/32"
6
1/4"
+ 2
- 2
+ 3/32"
- 3/32"
H
Z = 1/4"
8
40
5/16"
1 9/16"
TH = H - 47
TH = H - 1 27/32"

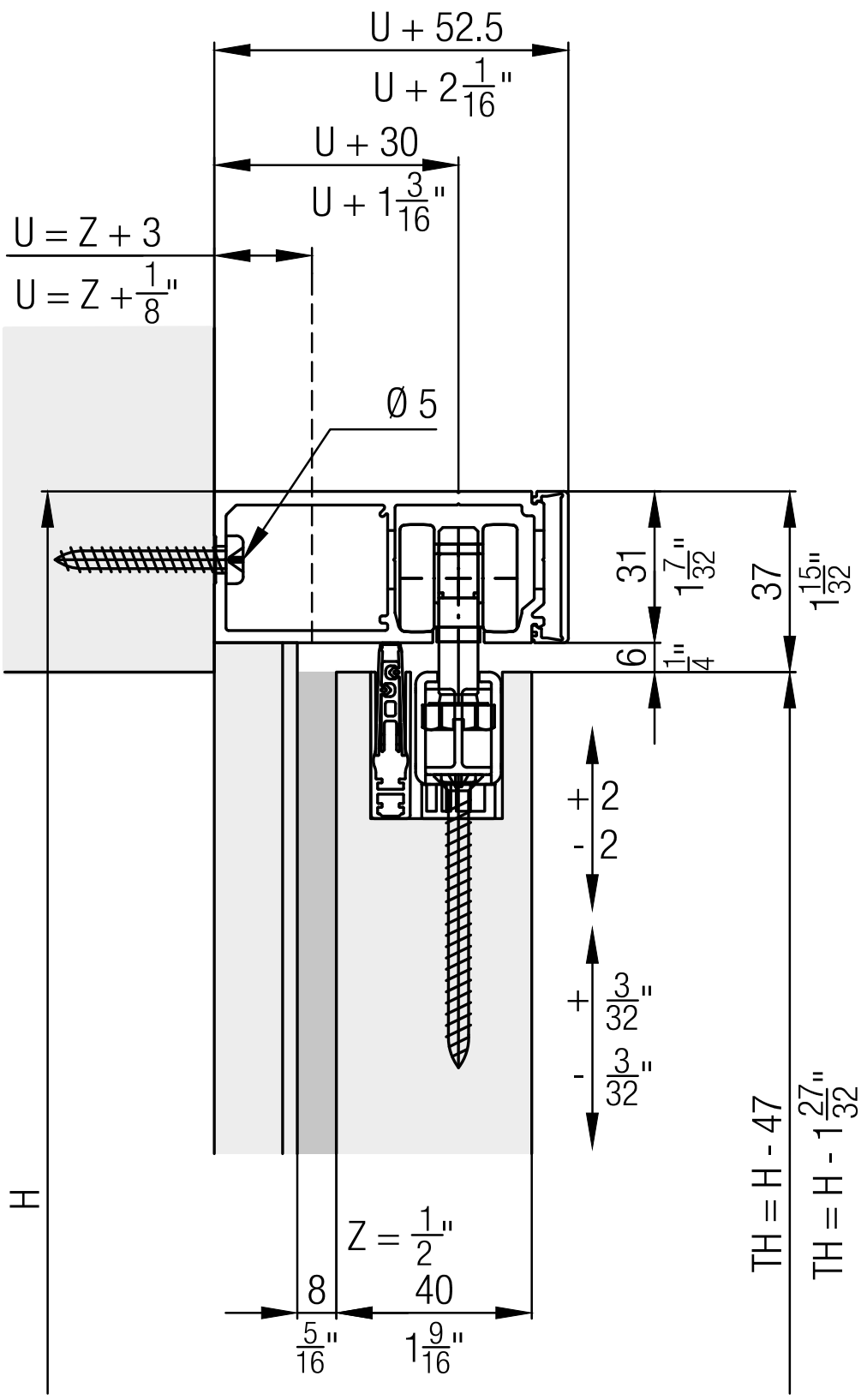
U + 52.5
U + 2 1/16"
U + 30
U + 1 3/16"
U = Z + 3
U = Z + 1/8"
Ø 5
31
1 7/32"
37
1 15/32"
6
1/4"
+ 2
- 2
+ 3/32"
- 3/32"
H
Z = 1/2"
8
40
5/16"
1 9/16"
TH = H - 47
TH = H - 1 27/32"