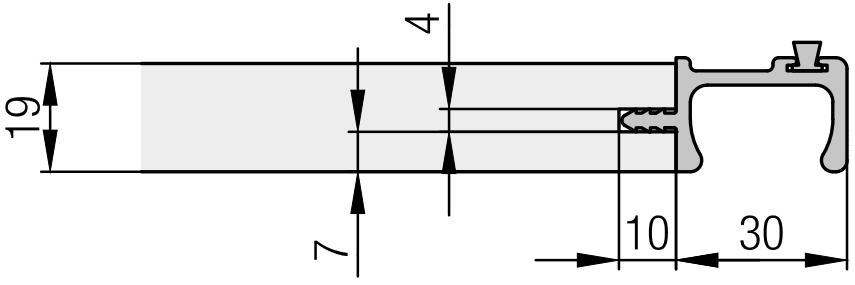
4
19
7
10
30

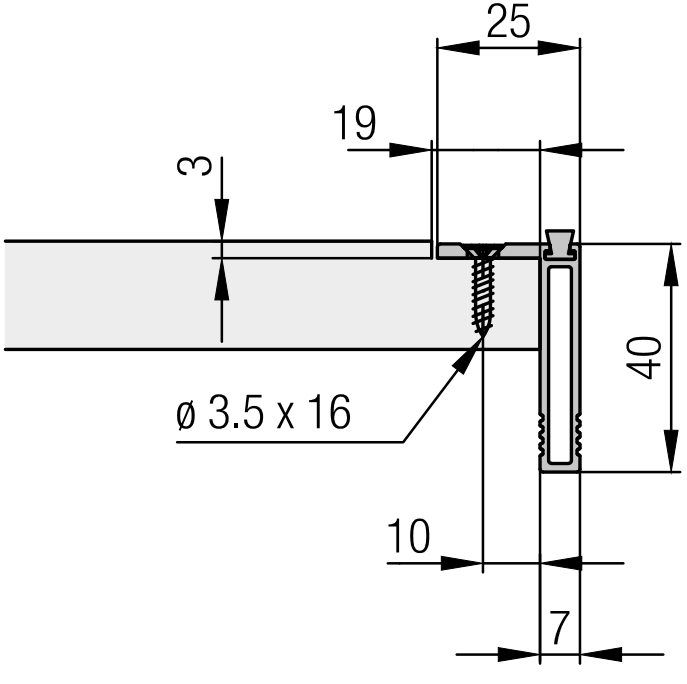
25
19
3
40
ø 3.5 x 16
10
7