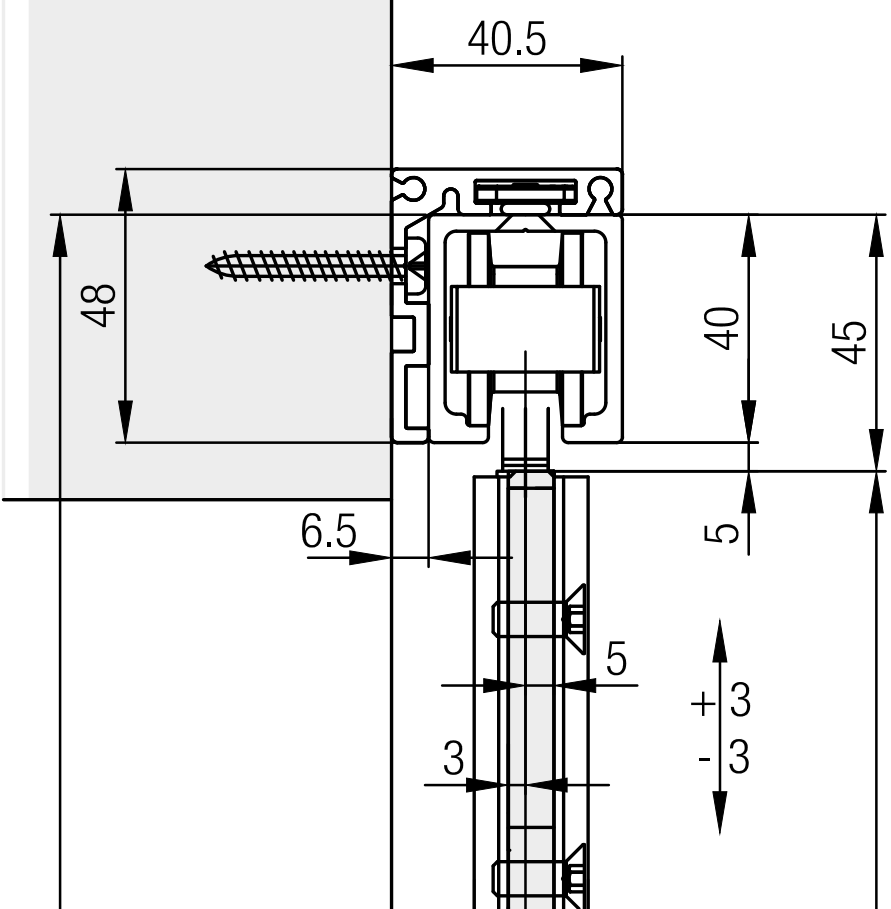
40.5
48
40
45
6.5
5
5
3
+ 3
- 3