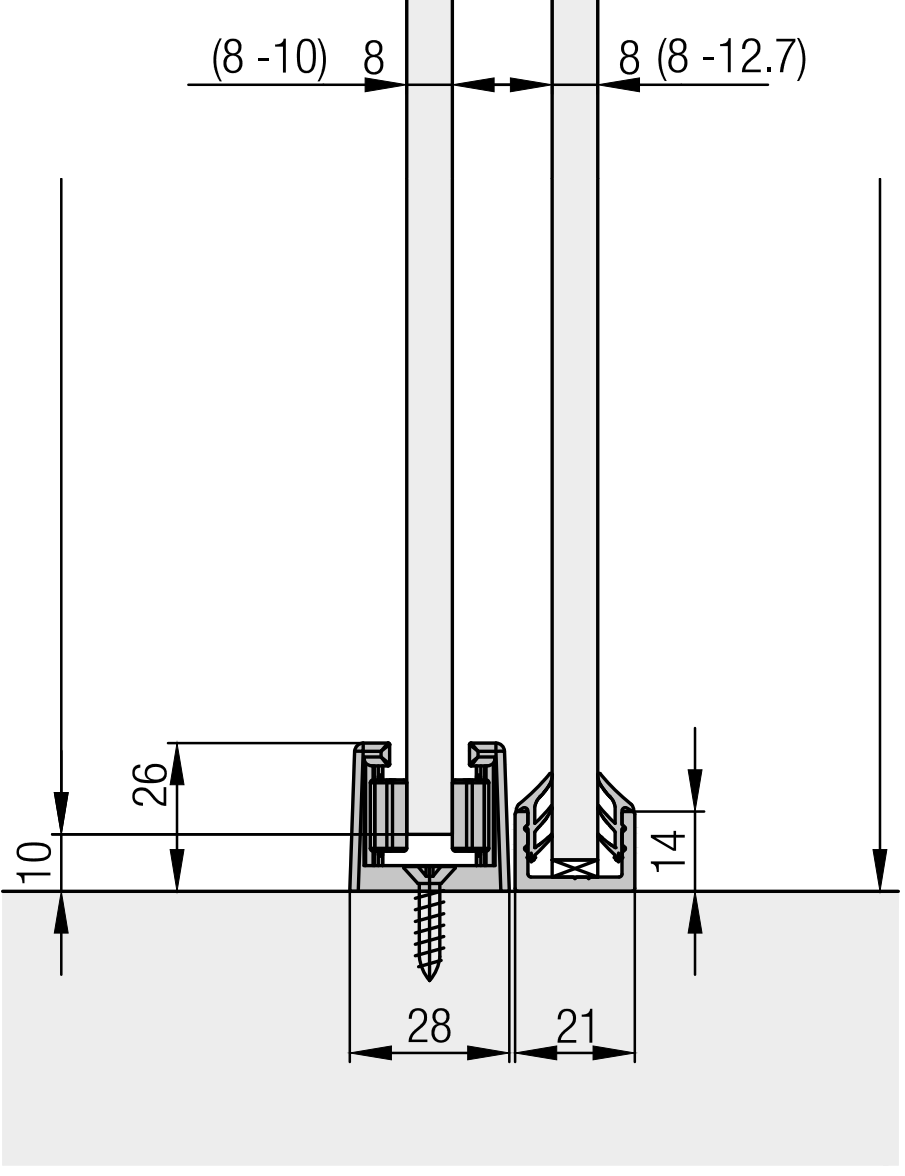
(8 -10)
8
8 (8 -12.7)
26
10
14
28
21

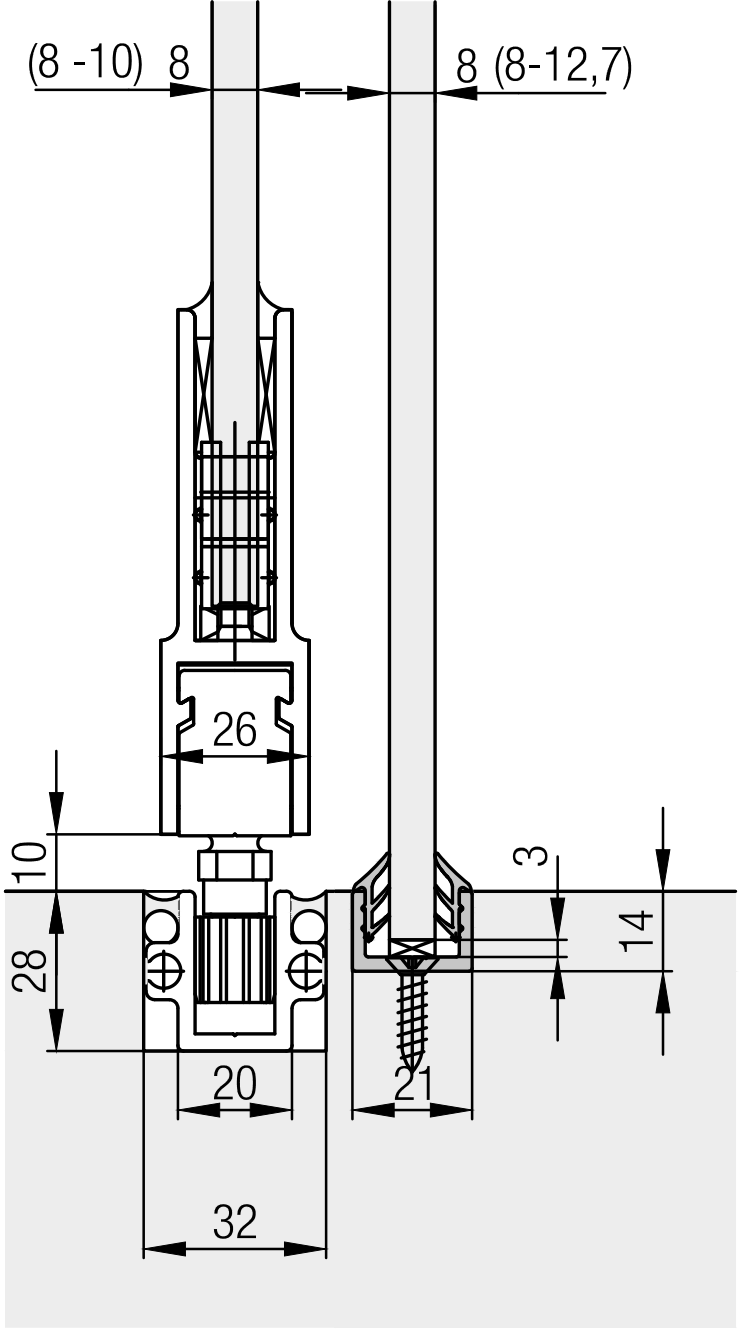
(8 -10)
8
8 (8-12,7)
26
10
3
14
28
20
21
32