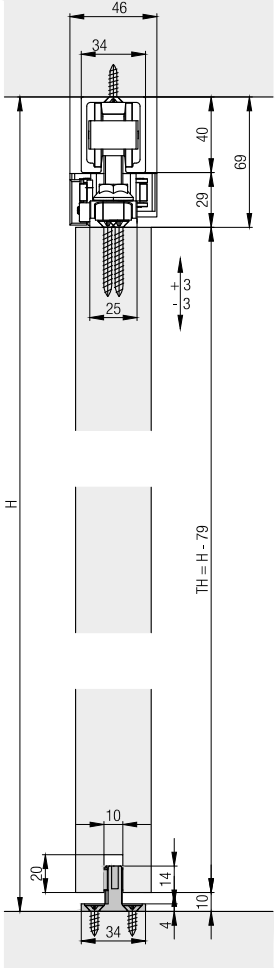
46
34
40
69
29
+3
-3
25
H
TH = H - 79
10
20
14
10
4
34

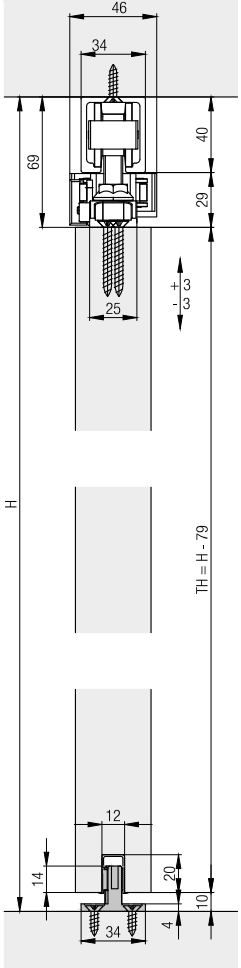
46
34
69
40
29
+3
-3
25
H
TH = H - 79
12
14
20
10
4
34

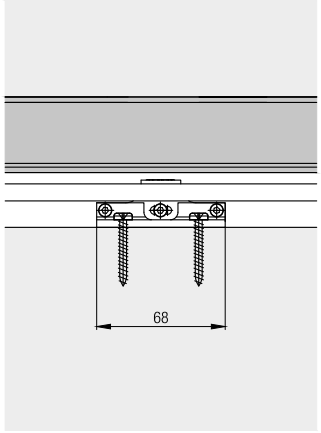
68

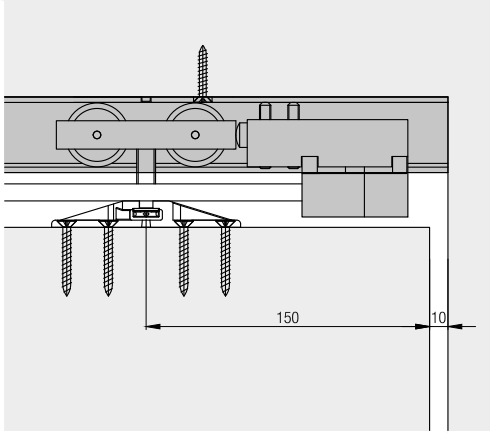
150
10

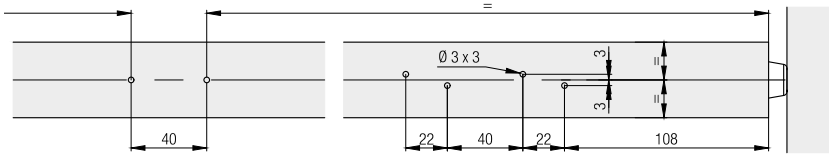
=
Ø 3 x 3
3
3
=
=
40
22
40
22
108