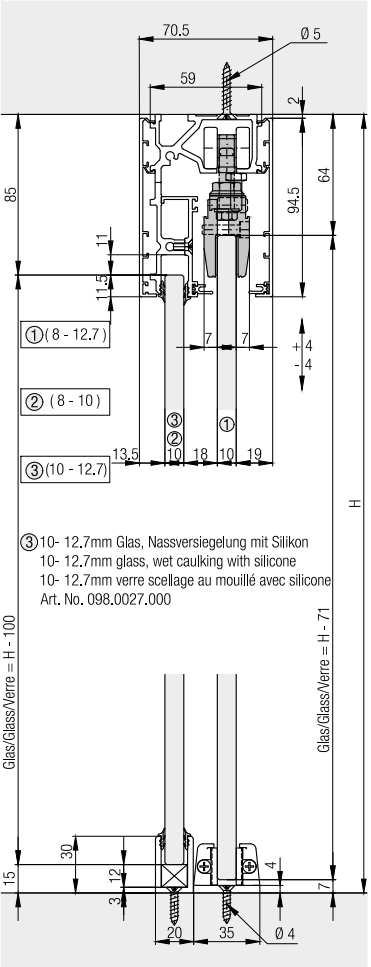

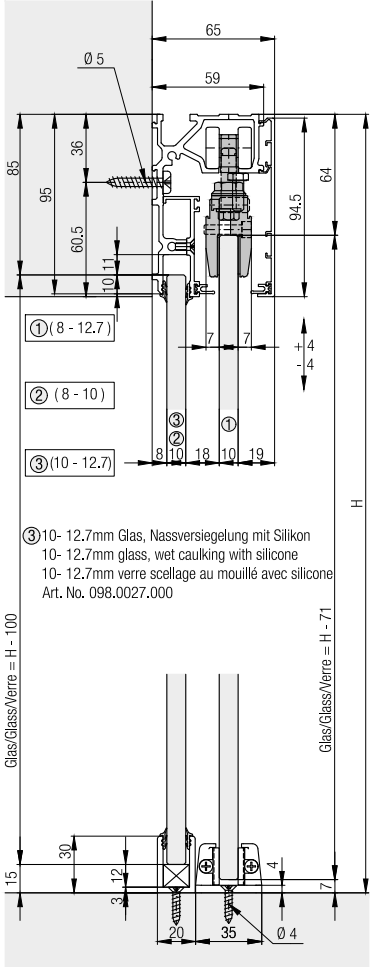

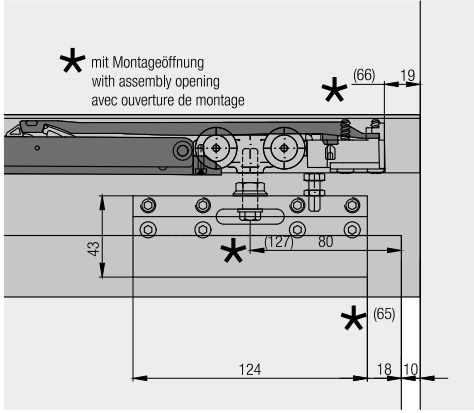

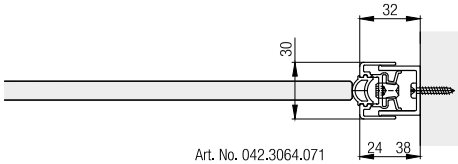
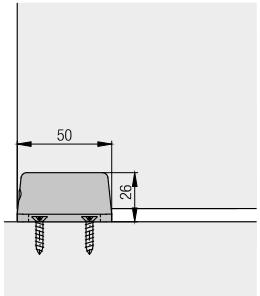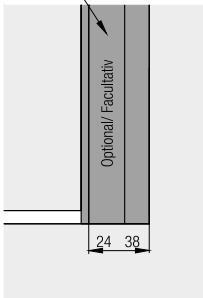
Art. No. 042.3064.071
Art. No. 042.3064.072