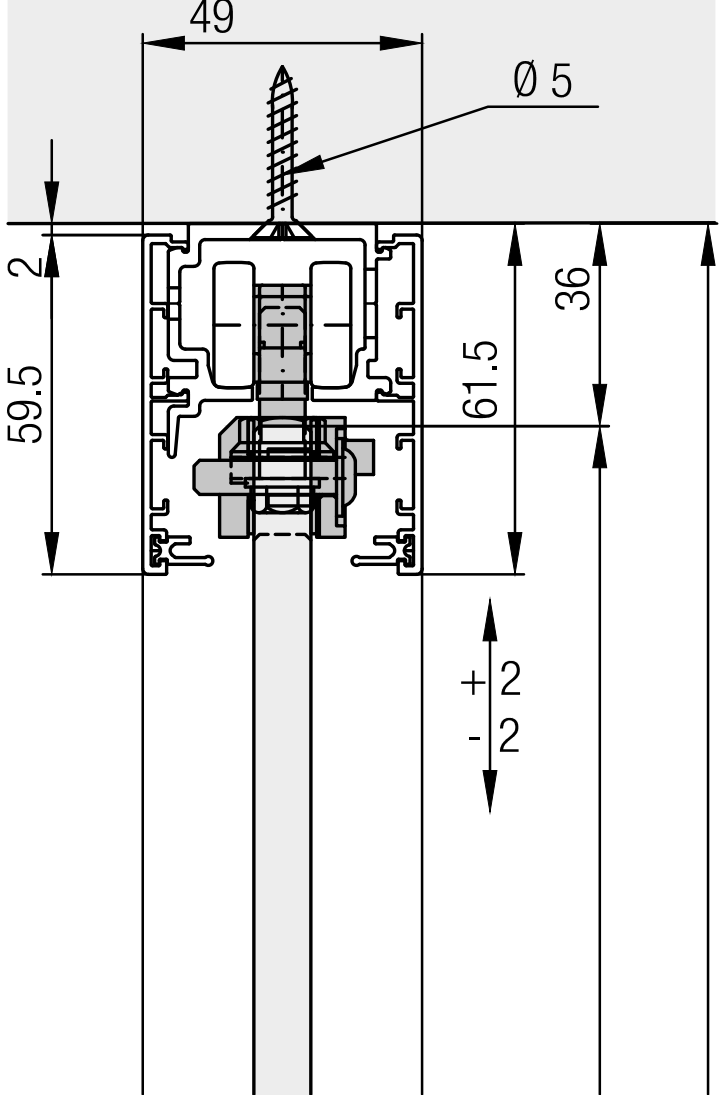
49
Ø 5
2
59.5
61.5
36
+ 2
- 2