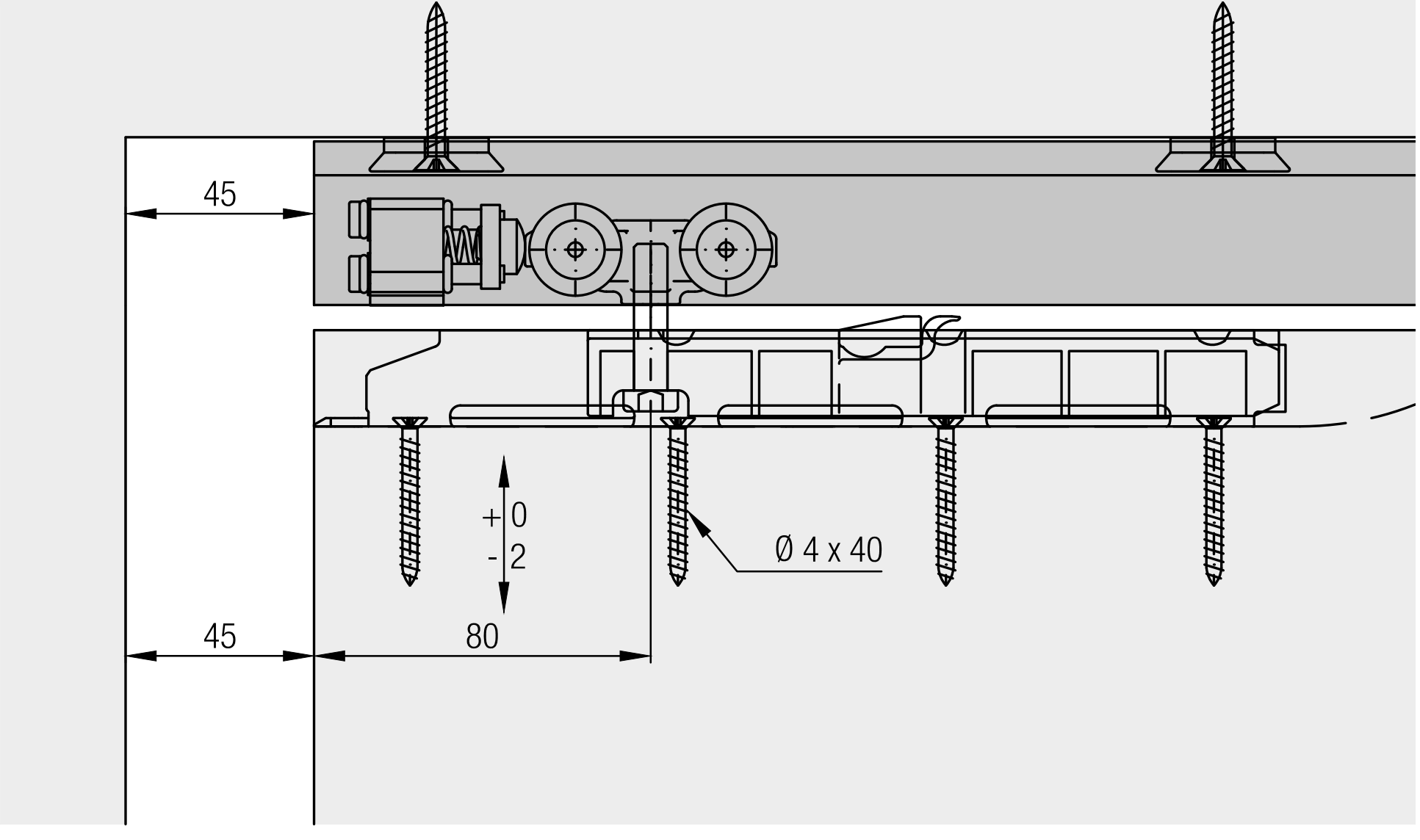
45
+ 0
- 2
Ø 4 x 40
45
80